Appendix L: TUUSSO Solar Project Site Plans and Designs

TUUSSO ENERGY - CAMAS SITE

A PORTION OF THE SE 1/4 OF SECTION 18 AND THE NE 1/4 OF SECTION 19, T. 17 N., R. 19 E. W.M.
KITTATAS COUNTY, STATE OF WASHINGTON

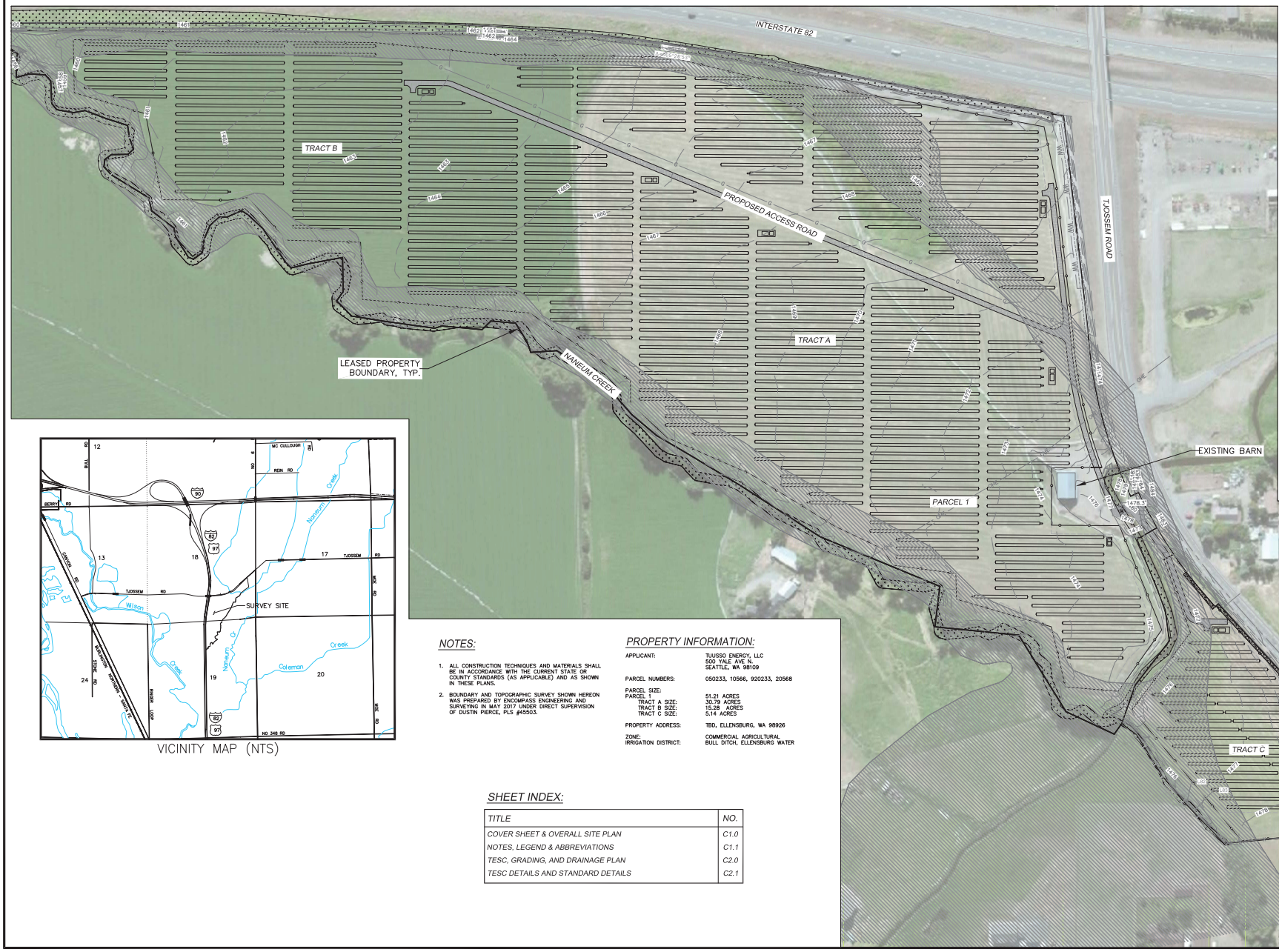

VICINITY MAP (NTS)

NOTES:

1. ALL CONSTRUCTION TECHNIQUES AND MATERIALS SHALL BE IN ACCORDANCE WITH THE CURRENT STATE OR COUNTY STANDARDS (AS APPLICABLE) AND AS SHOWN IN THESE PLANS.
2. BOUNDARY AND TOPOGRAPHIC SURVEY SHOWN HEREON WAS PREPARED BY ENCOMPASS ENGINEERING AND SURVEYING IN MAY 2017 UNDER DIRECT SUPERVISION OF DUSTIN PIERCE, PLS #45503.

PROPERTY INFORMATION:

APPLICANT:	TUUSSO ENERGY, LLC 500 YALE AVE N. SEATTLE, WA 98109
PARCEL NUMBERS:	050233, 10566, 920233, 20568
PARCEL SIZE:	
PARCEL 1	
TRACT A SIZE:	51.21 ACRES
TRACT B SIZE:	30.79 ACRES
TRACT C SIZE:	15.28 ACRES
	5.14 ACRES
PROPERTY ADDRESS:	TBD, ELLENSBURG, WA 98926
ZONE:	COMMERCIAL AGRICULTURAL
IRRIGATION DISTRICT:	BULL DITCH, ELLENSBURG WATER

SHEET INDEX:

TITLE	NO.
COVER SHEET & OVERALL SITE PLAN	C1.0
NOTES, LEGEND & ABBREVIATIONS	C1.1
TESC, GRADING, AND DRAINAGE PLAN	C2.0
TESC DETAILS AND STANDARD DETAILS	C2.1

REVISIONS		
DESCRIPTION	BY	DATE

© THE PLANS SET FORTH ON THIS SHEET ARE AND SHALL REMAIN THE PROPERTY OF ENCOMPASS ENGINEERING & SURVEYING.

TUUSSO ENERGY, LLC
CAMAS SITE
COVER SHEET & OVERALL SITE PLAN

Encompass ENGINEERING & SURVEYING
165 NE Juniper Street, Suite 201 • Issaquah, WA 98027 • Phone: (425) 392-0250 • Fax: (425) 391-3055
Western Washington Division
407 Southeast Blvd. • Cle Elum, WA 98922 • Phone: (509) 674-7433 • Fax: (509) 674-7419
Eastern Washington Division

JOB NO.	17017
DATE	Sept. 27 2017
SCALE	AS SHOWN
DESIGNED	SF
DRAWN	SF
CHECKED	TML
APPROVED	TML
SHEET	C1.0

STANDARD PLAN NOTES:

1. ALL CONSTRUCTION TECHNIQUES AND MATERIALS SHALL BE IN ACCORDANCE WITH THE CURRENT STATE OR COUNTY STANDARDS AND AS SHOWN IN THESE PLANS.
2. A COPY OF THE APPROVED PLANS MUST BE ON SITE WHENEVER CONSTRUCTION IS IN PROGRESS.
3. THE CONTRACTOR SHALL OBTAIN ALL PERMITS REQUIRED FOR WORK THAT ARE NOT PROVIDED BY THE OWNER PRIOR TO START OF CONSTRUCTION.
4. PAVED OR SIMILAR ESTABLISHED SURFACES INCLUDING ROADWAYS, SIDEWALKS AND CURBS THAT ARE TO REMAIN BUT ARE DAMAGED BY NEW CONSTRUCTION SHALL BE REPAIRED AS REQUIRED BY THE INSPECTOR.
5. ALL SURVEYING AND STAKING OF IMPROVEMENTS SHALL BE APPROVED BY THE OWNER. CONTRACTOR SHALL COORDINATE AND VERIFY WITH THE OWNER PRIOR TO OBTAINING STAKING SERVICES.
6. THE CONTRACTOR SHALL NOTIFY THE KITTITAS COUNTY FIRE DISTRICT (509-386-1495) TWENTY-FOUR (24) HOURS IN ADVANCE OF ALL WATER SERVICE INTERRUPTIONS, HYDRANT SHUT-OFFS, AND STREET CLOSURES OR OTHER ACCESS BLOCKAGE. THE CONTRACTOR SHALL ALSO NOTIFY THE DISTRICT OF ALL NEW, RELOCATED, OR ELIMINATED HYDRANTS RESULTING FROM THIS WORK.
7. ALL LOCATIONS OF EXISTING UTILITIES SHOWN HEREON HAVE BEEN ESTABLISHED BY FIELD SURVEY OR OBTAINED FROM AVAILABLE RECORDS AND SHOULD THEREFORE BE CONSIDERED APPROXIMATE ONLY AND NOT NECESSARILY COMPLETE. IT IS THE SOLE RESPONSIBILITY OF THE CONTRACTOR TO INDEPENDENTLY VERIFY THE ACCURACY OF ALL UTILITY LOCATIONS SHOWN AND TO FURTHER DISCOVER AND AVOID ANY OTHER UTILITIES NOT SHOWN HEREON WHICH MAY BE AFFECTED BY THE IMPLEMENTATION OF THIS PLAN.
8. THE CONTRACTOR SHALL LOCATE AND PROTECT ALL ACTIVE CASTINGS AND UTILITIES DURING CONSTRUCTION AND SHALL CONTACT THE UNDERGROUND UTILITIES LOCATOR SERVICE (1-800-424-5555 OR 811) AT LEAST 48 HOURS PRIOR TO CONSTRUCTION.
9. THE CONTRACTOR SHALL ADJUST ALL EXISTING MANHOLE RIMS, DRAINAGE STRUCTURE LIDS, VALVE BOXES AND UTILITY ACCESS STRUCTURES TO FINISH GRADE WITHIN AREAS AFFECTED BY THE PROPOSED IMPROVEMENTS.
10. THE CONTRACTOR SHALL PROVIDE FOR ALL COMPACTION TESTS REQUIRED BY THE INSPECTOR.
11. BACKFILL MATERIAL SHALL MEET STATE OR COUNTY STANDARDS.
12. INSPECTION AND ACCEPTANCE OF ALL WORK WILL BE ACCOMPLISHED BY THE DESIGNATED INSPECTOR. IT SHALL BE THE CONTRACTOR'S RESPONSIBILITY TO COORDINATE AND SCHEDULE APPROPRIATE INSPECTIONS, ALLOWING PROPER ADVANCE NOTICE. THE INSPECTOR MAY REQUIRE RECONSTRUCTION OF ITEMS THAT DO NOT MEET THE CONTRACT DOCUMENTS OR THAT WERE CONSTRUCTED WITHOUT INSPECTION.
13. THE CONTRACTOR SHALL PROVIDE AND MAINTAIN BEST MANAGEMENT PRACTICES AS SHOWN HEREIN TO INSURE THAT SEDIMENT-LADEN WATER DOES NOT ENTER THE WATER OF THE STATE. AS CONSTRUCTION PROGRESSES AND UNEXPECTED (SEASONAL) CONDITIONS DICTATE, ADDITIONAL BEST MANAGEMENT PRACTICES MAY BE REQUIRED. THEREFORE, DURING THE COURSE OF CONSTRUCTION IT SHALL BE THE OBLIGATION AND RESPONSIBILITY OF THE CONTRACTOR TO ADDRESS ANY NEW CONDITIONS THAT MAY BE CREATED BY HIS ACTIVITIES AND TO PROVIDE ADDITIONAL FACILITIES THAT MAY BE NEEDED TO PROTECT ADJACENT PROPERTIES.
14. THE CONTRACTOR SHALL KEEP ALL STREETS AND PUBLIC RIGHT-OF-WAY CLEAN AT ALL TIMES BY SWEEPING.
15. CONTRACTOR SHALL PROVIDE TRAFFIC CONTROL AS NECESSARY THROUGHOUT THE PROJECT. TRAFFIC CONTROL SHALL BE IN ACCORDANCE WITH THE MUTCD, STATE, AND/OR COUNTY STANDARDS.
16. CONTRACTOR SHALL NOT MAKE ANY REVISIONS IN THE FIELD WITHOUT PRIOR WRITTEN APPROVAL BY THE ENGINEER.
17. THE CONTRACTOR SHALL BE RESPONSIBLE FOR PROVIDING ADEQUATE SAFEGUARDS, SAFETY DEVICES, PROTECTIVE EQUIPMENT, FLAGGERS, AND ANY OTHER NEEDED ACTIONS TO PROTECT THE LIFE, HEALTH, AND SAFETY OF THE PUBLIC, AND TO PROTECT PROPERTY IN CONNECTION WITH THE PERFORMANCE OF WORK COVERED BY THE CONTRACTOR. ANY WORK WITHIN THE TRAVELED RIGHT-OF-WAY THAT MAY INTERRUPT NORMAL TRAFFIC FLOW SHALL REQUIRE AT LEAST ONE FLAGGER FOR EACH LANE OF TRAFFIC AFFECTED. ALL SECTIONS OF THE WSDOT STANDARD SPECIFICATIONS 1-07.23 - TRAFFIC CONTROL, SHALL APPLY.
18. ANY TRENCH DEEPER THAN 5 FEET WILL REQUIRE SHORING FOR TRENCH WALL STABILIZATION.

GENERAL TESC NOTES:

1. APPROVAL OF THIS TEMPORARY EROSION AND SEDIMENTATION CONTROL (TESC) PLAN DOES NOT CONSTITUTE AN APPROVAL OF PERMANENT ROAD OR DRAINAGE DESIGN (E.G. SIZE AND LOCATION OF ROADS, PIPES, RESTRICTORS, CHANNELS, RETENTION FACILITIES, UTILITIES, ETC.).
2. THE IMPLEMENTATION OF THESE TESC PLANS AND THE CONSTRUCTION, MAINTENANCE, REPLACEMENT, AND UPGRADING OF THESE TESC FACILITIES IS THE RESPONSIBILITY OF THE APPLICANT OR A TESC SUPERVISOR UNTIL ALL CONSTRUCTION IS APPROVED.
3. THE BOUNDARIES OF THE CLEARING LIMITS SHOWN ON THIS PLAN SHALL BE CLEARLY FLAGGED BY A CONTINUOUS LENGTH OF SURVEY TAPE (OR FENCING, IF REQUIRED) PRIOR TO CONSTRUCTION. DURING THE CONSTRUCTION PERIOD, NO DISTURBANCE BEYOND THE CLEARING LIMITS SHALL BE PERMITTED. THE CLEARING LIMITS SHALL BE MAINTAINED BY THE APPLICANT/TESC SUPERVISOR FOR THE DURATION OF CONSTRUCTION.
4. THE TESC FACILITIES SHOWN ON THIS PLAN MUST BE CONSTRUCTED PRIOR TO OR IN CONJUNCTION WITH ALL CLEARING AND GRADING SO AS TO ENSURE THAT THE TRANSPORT OF SEDIMENT TO SURFACE WATERS, DRAINAGE SYSTEMS, AND ADJACENT PROPERTIES IS MINIMIZED.
5. THE TESC FACILITIES SHOWN ON THIS PLAN ARE THE MINIMUM REQUIREMENTS FOR ANTICIPATED SITE CONDITIONS. DURING THE CONSTRUCTION PERIOD, THESE TESC FACILITIES SHALL BE UPGRADED AS NEEDED FOR UNEXPECTED STORM EVENTS AND MODIFIED TO ACCOUNT FOR CHANGING SITE CONDITIONS (E.G. ADDITIONAL SUMP PUMPS, RELOCATION OF DITCHES AND SILT FENCES, ETC.).
6. ANY AREAS OF EXPOSED SOILS, INCLUDING ROADWAY EMBANKMENTS, THAT WILL NOT BE DISTURBED FOR TEN DAYS DURING THE WET SEASON OR FOURTEEN DAYS DURING THE DRY SEASON SHALL BE IMMEDIATELY STABILIZED WITH THE APPROVED TESC METHODS (E.G., SEEDING, MULCHING, PLASTIC COVERING, ETC.).
7. ANY AREA NEEDING TESC MEASURES, NOT REQUIRING IMMEDIATE ATTENTION, SHALL BE ADDRESSED WITHIN FIFTEEN (15) DAYS.
8. THE TESC FACILITIES ON INACTIVE SITES SHALL BE INSPECTED AND MAINTAINED A MINIMUM OF ONCE A MONTH OR WITHIN 48 HOURS FOLLOWING A STORM EVENT.
9. AT NO TIME SHALL MORE THAN ONE (1) FOOT OF SEDIMENT BE ALLOWED TO ACCUMULATE WITHIN A CATCH BASIN. ALL CATCH BASINS AND CONVEYANCE LINES SHALL BE CLEANED PRIOR TO PAVING. THE CLEANING OPERATION SHALL NOT FLUSH SEDIMENT-LADEN WATER INTO THE DOWNSTREAM SYSTEM.
10. STABILIZED CONSTRUCTION ENTRANCES AND ROADS SHALL BE INSTALLED AT THE BEGINNING OF CONSTRUCTION AND MAINTAINED FOR THE DURATION OF THE PROJECT. ADDITIONAL MEASURES, SUCH AS WASH PADS, MAY BE REQUIRED TO ENSURE THAT ALL PAVED AREAS ARE KEPT CLEAN FOR THE DURATION OF THE PROJECT.
11. ANY PERMANENT RETENTION/DETENTION FACILITY USED AS A TEMPORARY SETTLING BASIN SHALL BE MODIFIED WITH THE NECESSARY EROSION CONTROL MEASURES AND SHALL PROVIDE ADEQUATE STORAGE CAPACITY. IF THE PERMANENT FACILITY IS TO FUNCTION ULTIMATELY AS AN INFILTRATION SYSTEM, THE TEMPORARY FACILITY MUST BE GRADED SO THAT THE BOTTOM AND SIDES ARE AT LEAST ONE FOOT ABOVE THE FINAL GRADE OF THE PERMANENT FACILITY.
12. WHERE STRAW MULCH FOR TEMPORARY EROSION CONTROL IS REQUIRED, IT SHALL BE APPLIED AT A MINIMUM THICKNESS OF TWO INCHES

STANDARD GRADING NOTES:

1. ALL GRADING ACTIVITIES, INCLUDING EXCAVATION, BACKFILL AND COMPACTION, SHALL BE DONE IN ACCORDANCE WITH STATE OR COUNTY STANDARDS AS APPLICABLE.
2. WITHIN ANY AREAS TO RECEIVE STRUCTURAL FILL, PAVEMENTS OR HARDSCAPE, THE SUBGRADE SHALL BE SCARIFIED, MOISTURE CONDITIONED, AND COMPACTED TO AT LEAST 95% MAXIMUM DENSITY (ASTM D 1557).
3. CONTRACTOR SHALL OBTAIN AN APPROVAL BY THE GEOTECHNICAL ENGINEER PRIOR TO PROCEEDING WITH ANY OVEREXCAVATION. CONTRACTOR SHALL VERIFY THE AMOUNT OF OVEREXCAVATION WITH GEOTECHNICAL ENGINEER.
4. COMPACTION SHALL BE DONE PER STATE OR COUNTY STANDARDS AS APPLICABLE. SITE EXCAVATION AND/OR SUBGRADE PREPARATION SHALL BE COMPLETED BEFORE PLACING STRUCTURAL FILL. COMPACTION SHALL BE VERIFIED BY DENSITY TESTING.
5. ALL TEMPORARY CUT SLOPES SHALL NOT EXCEED 1.5H:1V. ALL PERMANENT CUT SLOPES SHALL NOT EXCEED 2H:1V OR AS SHOWN ON PLANS. ALL PERMANENT FILL SLOPES SHALL NOT EXCEED 2H:1V.
6. CONTRACTOR SHALL IMPLEMENT APPROPRIATE PROTECTION AND TRAFFIC CONTROL DURING CONSTRUCTION TO DIRECT TRUCK TRAFFIC.
7. ANY AND ALL FILL MATERIAL PLACED ON THE LOT SHALL BE COMPACTED AND A COMPACTION INSPECTION REPORT FOR THE COMPACTION AND BEARING CAPACITY OF THAT FILL MATERIAL SHALL BE PROVIDED TO THE STATE OR COUNTY AS APPLICABLE WITHIN 60 DAYS OF THE PLACEMENT OF THE FILL MATERIAL.
8. ALL EXCESS SOIL SHALL BE OFF-HAULED TO A LEGAL DISPOSAL SITE. NO EXCESS SOIL SHALL BE SPREAD ON THE SITE WITHOUT CLEARLY BEING SHOWN ON THE APPROVED GRADING PLAN.
9. ALL CUT AND FILL SLOPES AND ALL EXPOSED DIRT SHALL BE PLANTED, WATERED AND MAINTAINED UNTIL EFFECTIVE EROSION CONTROL HAS BEEN ESTABLISHED TO THE SATISFACTION OF THE STATE OR COUNTY AS APPLICABLE.
10. CONTRACTOR SHALL PROVIDE HIS/HER OWN EARTHWORK CALCULATIONS FOR ALL CUT AND FILL OPERATIONS.

ABBREVIATIONS:

AC – ASPHALT CONCRETE
ACP – ABESTOS CEMENT PIPE
ADD'L – ADDITIONAL
AD – AREA DRAIN
ADJ – ADJACENT
ANSI – AMERCIAN NATIONAL STANDARDS INSTITUTE
ALT – ALTERNATE
ALUM – ALUMINUM
APPROX – APPROXIMATE(LY)
ARCH – ARCHITECT(URAL)
AP – ANGLE POINT
ASPH – ASPHALT
ASSY – ASSEMBLY
ASTM – AMERICAN SOCIETY OF TESTING AND MATERIALS
AVE – AVENUE
BC – BACK OF CURB
BF – BLIND FLANGE
BLDG – BUILDING
BLDG – BUILDING CORNER
BLK – BLOCK
BLVD – BOULEVARD
BM – BENCHMARK
BNDY – BOUNDARY
BO – BLOW OFF
BOW – BOTTOM OF WALL (AT FINISHED GRADE)
BSBL – BUILDING SETBACK LINE
BVC – BEGINNING OF VERTICAL CURVE
BVCE – BEGIN VERTICAL CURVE ELEVATION
BVCS – BEGIN VERTICAL CURVE STATION
BW – BACK OF WALK
CB – CATCH BASIN
CF – CUBIC FEET (FOOT)
CIP – CAST IRON PIPE
CJ – CONSTRUCTION JOINT
CL – CLASS
C/L – CENTER LINE
CLR – CLEARENCE
CMP – CORRUGATED METAL PIPE
CO – CLEAN OUT
CONN – CONNECTION
CONT – CONTINUOUS (CONTINUED)
CONTR – CONTRACTOR
C, CONC – CONCRETE
CONST – CONSTRUCTION
CP – CONTROL POINT
CFS – CUBIC FEET PER SECOND
CTR – CENTER(ED)
CTV – CABLE TV
C&G – CURB AND GUTTER
CY – CUBIC YARD
DCVA – DOUBLE CHECK VALVE ASSEMBLY
DDCV – DOUBLE DETECTOR CHECK VALVE
DEPT. – DEPARTMENT
DET – DETAIL OR DETENTION
DIP – DUCTILE IRON PIPE
DIA(S) – DIAMETER
DIM – DIMENSION
DOT – DEPARTMENT OF TRANSPORTATION
DS – DOWN SPOUT
DWG – DRAWING
E – EAST(ING)
EA – EACH
EL – ELEVATION
ELEC – ELECTRICAL
EP – EDGE OF PAVEMENT
EQUIV – EQUIVALENT
EVC – END OF VERTICAL CURVE
EVCE – END OF VERTICAL CURVE ELEVATION
EVCS – END OF VERTICAL CURVE STATION
EX, EXIST – EXISTING
FC – FACE OF CURB
FD – FLOOR DRAIN
FDC – FIRE DEPARTMENT CONNECTION
FFE – FINISH FLOOR ELEVATION
FH – FIRE HYDRANT
FL – FLANGED OR FLOW LINE
FLR – FLOOR
FS – FINISHED SURFACE
FT (') – FOOT (FEET)
FTG – FOOTING
G – GAS MAIN
GA – GAUGE
GALV – GALVANIZED
GB – GRADE BREAK
GM– GAS METER
GRD – GRADE
HB – HOSE BIBB
HDPE – HIGH DENSITY POLYETHYLENE
HORIZ (H) – HORIZONTAL
HT – HEIGHT
HYD – HYDRANT
ID – INSIDE DIAMETER
E – INVERT ELEVATION
IN (") – INCHES
INV – INVERT
IRR – IRRIGATION WATER
L – LENGTH
LB, # – POUND(S)
LF – LINEAR FEET
LN – LANE
MAT'L – MATERIAL
MAX – MAXIMUN
MFR – MANUFACTURER
MH – MANHOLE
MIN – MINIMUM
MISC – MISCELLANEOUS
MJ – MECHANICAL JOINT
N – NORTH(ING)
NO (#) – NUMBER
N.T.S. – NOT TO SCALE
O.C. – ON CENTER
O.D. – OUTSIDE DIAMETER
O/W – OIL WATER
P – POWER
PC – POINT OF CURVATURE
PERF – PERFORATED
PI – POINT OF INTERSECTION
PIV – POST INDICTOR VALVE
PL – PROPERTY LINE
PP – POWER POLE
PROV – PROVIDED
PSF – POUNDS PER SQUARE FOOT
PSI – POINDS PER SQUARE INCH
PT – POINT OF TANGENCY
PVC – POLYVINYL CHLORIDE
PVI – POINT OF VERTICAL INTERSECTION
PVMT – PAVEMENT
PVT – POINT OF VERTICAL TANGENT
QTY – QUANTITY
RAD (R) – RADIUS
RCP – REINFORCED CONCRETE PIPE
RD – ROAD
REF – REFERENCE
REINF – REINFORCED
REQ – REQUIRED
RET – RETAINING
ROW – RIGHT-OF-WAY
RR – RAILROAD
S – SOUTH
S, SL – SLOPE
SCH – SCHEDULE
SD – STORM DRAIN
SF – SQUARE FOOT
SHT – SHEET
SIM – SIMILAR
SPEC – SPECIFICATION(S)
SQ – SQUARE
SS – SANITARY SEWER
ST – STREET
STA – STATION
STD – STANDARD
STL – STEEL
T – TELEPHONE WIRE
TBM – TEMPORARY BENCH MARK
TC – TOP OF CURB
TEMP – TEMPORARY
TG/RIM – TOP OF GRATE/RIM
THRU – THROUGH
TOE – TOE OF WALL OR SLOPE
TOP – TOP OF WALL OR SLOPE
TOW – TOP OF WALL
TYP – TYPICAL
VC – VERTICAL CURVE
VOL – VOLUME
W – WEST
W/ – WITH
WM – WATER METER
W/O – WITHOUT
WQ – WATER QUALITY
WT – WEIGHT
WWF – WELDED WIRE FABRIC
WV – WATER VALVE
YD – YARD DRAIN

LEGEND

	EXISTING:	PROPOSED:
BOUNDARY LINE/RIGHT-OF-WAY		
LOT LINE		
STREET MONUMENT (IN CONCRETE)		
PROPERTY CORNER		
BENCHMARK/CONTROL POINT		
TEMPORARY BENCHMARK	TBM	TBM
EASEMENT LINE		
CENTERLINE		
CURB/GUTTER/SIDEWALK LINE		
EDGE OF PAVEMENT LINE		
CHAIN LINK FENCE LINE		
SIGN		
STREET LIGHT (ELECTROLIER)		
GRADE BREAK LINE		
CONTOUR LINE (MAJOR)	1650	1650
CONTOUR LINE (MINOR)	1651	1651
CATCH BASIN (TYPE 1)		
STORM DRAIN MANHOLE/CATCH BASIN TYPE 2		
STORM DRAIN LINE	SD	
CONTROL STRUCTURE		
RIP-RAP PAD		
SANITARY SEWER LINE	SS	
SANITARY SEWER CLEANOUT		
SANITARY SEWER MANHOLE		
WATERMAIN LINE	W	
GATE VALVE (MECHANICAL JOINT)		
GATE VALVE (FLANGE)		
WATER METER		
FIRE HYDRANT		
CAP		
GAS LINE	G	G
GAS VALVE		
UNDERGROUND ELECTRIC LINE	E	E
POWER POLE / UTILITY POLE		
GUY ANCHOR		
ELECTRICAL TRANSFORMER / VAULT	P	P
TELEPHONE VAULT/PEDESTAL	T	T
TELEPHONE MANHOLE	T	T
100-YR FLOODPLAIN HATCH		
CONCRETE HATCH		
GRAVEL HATCH		
ALL WEATHER ROAD HATCH (COMPACTED SOIL OR GRAVEL)		
PROPOSED LANDSCAPING STRIP		

CONTRACTOR RESPONSIBILITY:

CONTRACTOR AGREES THAT HE SHALL ASSUME SOLE AND COMPLETE RESPONSIBILITY FOR JOB SITE CONDITIONS, INCLUDING THE SAFETY OF ALL PERSONS AND PROPERTY, DURING THE COURSE OF CONSTRUCTION OF THIS PROJECT, AND THAT THIS REQUIREMENT SHALL APPLY CONTINUOUSLY AND NOT BE LIMITED TO NORMAL WORKING HOURS. THE CONTRACTOR SHALL DEFEND, INDEMNIFY AND HOLD THE OWNER AND THE ENGINEER HARMLESS FROM ANY AND ALL LIABILITY, REAL OR ALLEGED, IN CONNECTION WITH THE PERFORMANCE OF WORK ON THIS PROJECT, EXCEPTING FOR LIABILITY ARISING FROM THE SOLE NEGLIGENCE OF THE OWNER OR THE ENGINEER.

DISCREPANCIES:

IF THERE ARE ANY DISCREPANCIES BETWEEN DIMENSIONS IN DRAWINGS AND EXISTING CONDITIONS WHICH WILL AFFECT THE WORK, THE CONTRACTOR SHALL BRING SUCH DISCREPANCIES TO THE ATTENTION OF THE ENGINEER FOR ADJUSTMENT BEFORE PROCEEDING WITH THE WORK. THE CONTRACTOR SHALL BE RESPONSIBLE FOR THE PROPER FITTING OF ALL WORK AND FOR THE COORDINATION OF ALL TRADES, SUBCONTRACTORS, AND PERSONS ENGAGED UPON THIS CONTRACT.

REVISIONS		
DESCRIPTION	BY	DATE

© THE PLANS SET FORTH ON THIS SHEET ARE AND SHALL REMAIN THE PROPERTY OF ENCOMPASS ENGINEERING & SURVEYING.

TODD MICHOULIS HOCKEN
STATE OF WASHINGTON
40995
REGISTERED
PROFESSIONAL ENGINEER

TUUSSO ENERGY, LLC
CAMAS SITE
NOTES, LEGEND & ABBREVIATIONS

Encompass
ENGINEERING & SURVEYING
165 NE Juniper Street, Suite 201 • Issaquah, WA 98027 • (425) 392-0250 • Fax: (425) 391-3055
Western Washington Division
407 Southeast Blvd. • Cle Elum, WA 98922 • Phone: (509) 674-7433 • Fax: (509) 674-7419
Eastern Washington Division

JOB NO.	17017
DATE	Sept. 27 2017
SCALE	AS SHOWN
DESIGNED	SF
DRAWN	SF
CHECKED	TML
APPROVED	TML
SHEET	C1.1

TUUSSO ENERGY - CAMAS SITE

A PORTION OF THE SE 1/4 OF SECTION 18 AND THE NE 1/4 OF SECTION 19, T. 17 N., R. 19 E. W.M.
KITTATAS COUNTY, STATE OF WASHINGTON

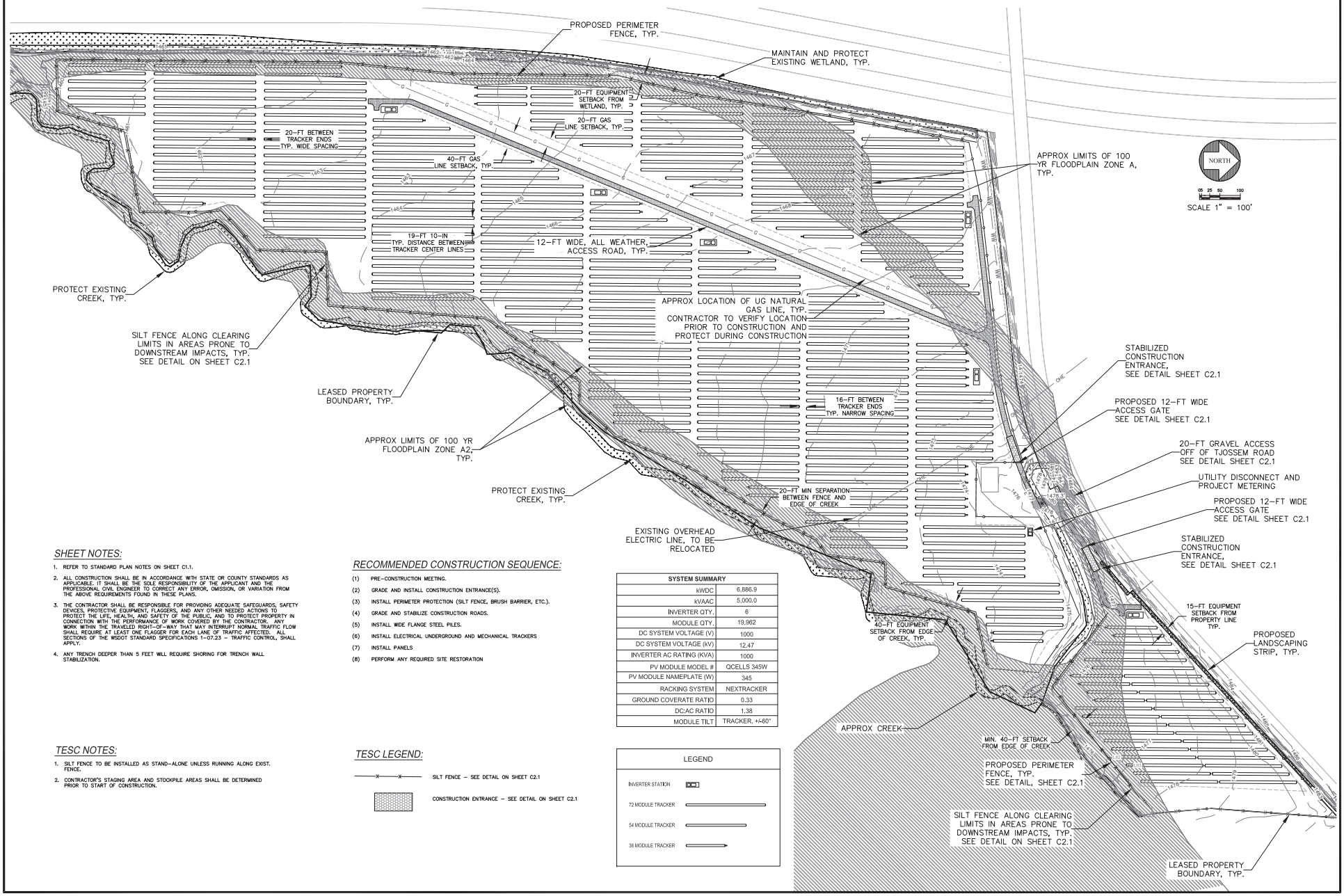

SHEET NOTES:

1. REFER TO STANDARD PLAN NOTES ON SHEET C1.1.
2. ALL CONSTRUCTION SHALL BE IN ACCORDANCE WITH STATE OR COUNTY STANDARDS AS APPLICABLE. IT SHALL BE THE SOLE RESPONSIBILITY OF THE APPLICANT AND THE PROFESSIONAL CIVIL ENGINEER TO CORRECT ANY ERROR, OMISSION, OR VARIATION FROM THE ABOVE REQUIREMENTS FOUND IN THESE PLANS.
3. THE CONTRACTOR SHALL BE RESPONSIBLE FOR PROVIDING ADEQUATE SAFEGUARDS, SAFETY DEVICES, PROTECTIVE EQUIPMENT, FLAGGERS, AND ANY OTHER NEEDED ACTIONS TO PROTECT THE LIFE, HEALTH, AND SAFETY OF THE PUBLIC, AND TO PROTECT PROPERTY IN CONNECTION WITH THE PERFORMANCE OF WORK COVERED BY THE CONTRACTOR. ANY WORK WITHIN THE TRAVELED RIGHT-OF-WAY THAT MAY INTERRUPT NORMAL TRAFFIC FLOW SHALL REQUIRE AT LEAST ONE FLAGGER FOR EACH LANE OF TRAFFIC AFFECTED. ALL SECTIONS OF THE WSDOT STANDARD SPECIFICATIONS 1-07.23 - TRAFFIC CONTROL, SHALL APPLY.
4. ANY TRENCH DEEPER THAN 5 FEET WILL REQUIRE SHORING FOR TRENCH WALL STABILIZATION.

TESC NOTES:

1. SILT FENCE TO BE INSTALLED AS STAND-ALONE UNLESS RUNNING ALONG EXIST. FENCE.
2. CONTRACTOR'S STAGING AREA AND STOCKPILE AREAS SHALL BE DETERMINED PRIOR TO START OF CONSTRUCTION.

RECOMMENDED CONSTRUCTION SEQUENCE:

(1) PRE-CONSTRUCTION MEETING.
(2) GRADE AND INSTALL CONSTRUCTION ENTRANCE(S).
(3) INSTALL PERIMETER PROTECTION (SILT FENCE, BRUSH BARRIER, ETC.).
(4) GRADE AND STABILIZE CONSTRUCTION ROADS.
(5) INSTALL WIDE FLANGE STEEL PILES.
(6) INSTALL ELECTRICAL UNDERGROUND AND MECHANICAL TRACKERS
(7) INSTALL PANELS
(8) PERFORM ANY REQUIRED SITE RESTORATION

SYSTEM SUMMARY	
kWDC	6,886.9
kVAAC	5,000.0
INVERTER QTY.	6
MODULE QTY.	19,962
DC SYSTEM VOLTAGE (V)	1000
DC SYSTEM VOLTAGE (kV)	12.47
INVERTER AC RATING (KVA)	1000
PV MODULE MODEL #	QCELLS 345W
PV MODULE NAMEPLATE (W)	345
RACKING SYSTEM	NEXTRACKER
GROUND COVERATE RATIO	0.33
DC:AC RATIO	1.38
MODULE TILT	TRACKER, +/-60°

TESC LEGEND:

SILT FENCE - SEE DETAIL ON SHEET C2.1

CONSTRUCTION ENTRANCE - SEE DETAIL ON SHEET C2.1

LEGEND

INVERTER STATION
72 MODULE TRACKER
54 MODULE TRACKER
36 MODULE TRACKER

REVISIONS		
DESCRIPTION	BY	DATE

© THE PLANS SET FORTH ON THIS SHEET ARE AND SHALL REMAIN THE PROPERTY OF ENCOMPASS ENGINEERING & SURVEYING.

TUSSO ENERGY, LLC
CAMAS SITE
TESC, GRADING, AND DRAINAGE PLAN

Encompass ENGINEERING & SURVEYING
165 NE Juniper Street, Suite 201 • Issaquah, WA 98027 • Phone: (425) 392-0250 • Fax: (425) 391-3055 Western Washington Division
407 Southeast Blvd. • Cle Elum, WA 98922 • Phone: (509) 674-7433 • Fax: (509) 674-7419 Eastern Washington Division

JOB NO.	17017
DATE	Sept. 27 2017
SCALE	AS SHOWN
DESIGNED	SF
DRAWN	SF
CHECKED	TML
APPROVED	TML
SHEET	C2.0

TUUSSO ENERGY - CAMAS SITE

A PORTION OF THE SE 1/4 OF SECTION 18 AND THE NE 1/4 OF SECTION 19, T. 17 N., R. 19 E. W.M.
KITTATAS COUNTY, STATE OF WASHINGTON

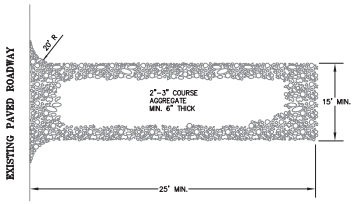

NOTES:
1. THE ENTRANCE SHALL BE MAINTAINED IN A CONDITION THAT WILL PREVENT TRACKING OR FLOWING OF SEDIMENT ONTO PUBLIC RIGHTS-OF-WAY. THIS MAY REQUIRE TOP DRESSING, REPAIR AND/OR CLEANOUT OF ANY MEASURES USED TO TRAP SEDIMENT.
2. WHEN NECESSARY, WHEELS SHALL BE CLEANED PRIOR TO ENTRANCE ONTO PUBLIC RIGHT-OF-WAY.
3. WHEN WASHING IS REQUIRED, IT SHALL BE DONE ON AN AREA STABILIZED WITH CRUSHED STONE THAT DRAINS INTO AN APPROVED SEDIMENT TRAP OR SEDIMENT BASIN.

ROCK CONSTRUCTION ENTRANCE
N.T.S.

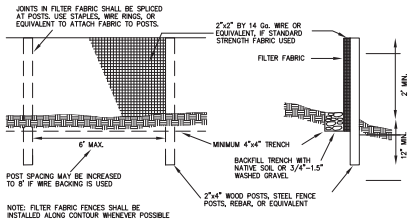

SILT FENCE DETAIL
N.T.S.

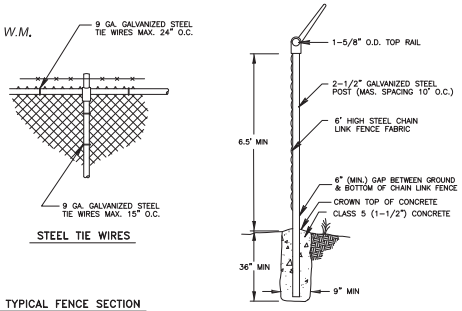

TYPICAL FENCE SECTION

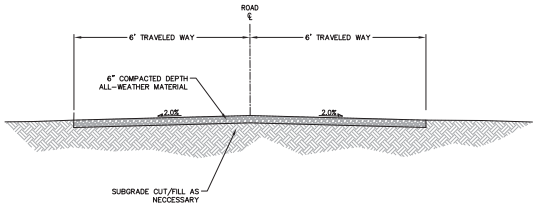

TYPICAL ALL-WEATHER ACCESS ROAD SECTION
N.T.S.

POST AND RAIL SPECIFICATIONS			
POST	PIPE	ROLL FORMED	
	NOM. SIZE (SCH. 40) I.D.	SECTION	WEIGHT (lb/ft)
END, CORNER, OR PULL POST	2 1/2" DIAM.	Y	5.10
LINE OR BRACE POST	2" DIAM.	Z	1.85

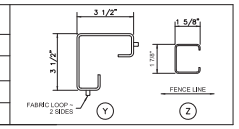

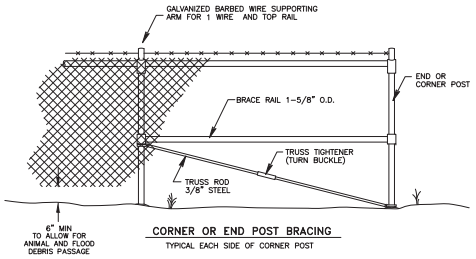

CORNER OR END POST BRACING
TYPICAL EACH SIDE OF CORNER POST

CHAIN LINK FENCE DETAIL
N.T.S.

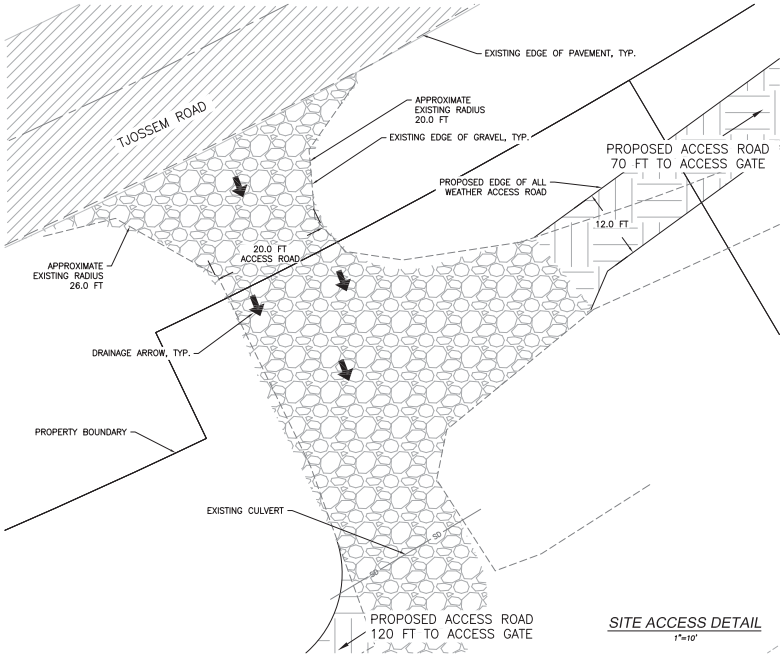

SITE ACCESS DETAIL
1"=10'

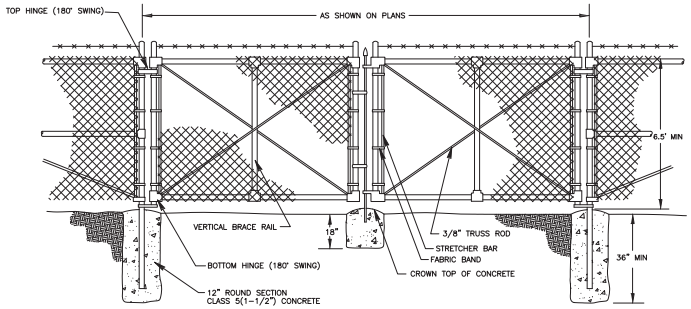

CHAIN LINK FENCE GATE DETAIL
N.T.S.

REVISIONS		
DESCRIPTION	BY	DATE

© THE PLANS SET FORTH ON THIS SHEET ARE AND SHALL REMAIN THE PROPERTY OF ENCOMPASS ENGINEERING & SURVEYING.

TUUSSO ENERGY, LLC
CAMAS SITE
TESC DETAILS AND STANDARD DETAILS

Encompass ENGINEERING & SURVEYING
165 NE Juniper Street, Suite 201 • Issaquah, WA 98027 • Phone: (425) 392-0250 • Fax: (425) 391-3055 — Western Washington Division
407 Southeast Blvd. • Cle Elum, WA 98922 • Phone: (509) 674-7433 • Fax: (509) 674-7419 — Eastern Washington Division

JOB NO.	17017
DATE	Sept. 27 2017
SCALE	AS SHOWN
DESIGNED	SF
DRAWN	SF
CHECKED	TML
APPROVED	TML
SHEET	C2.1

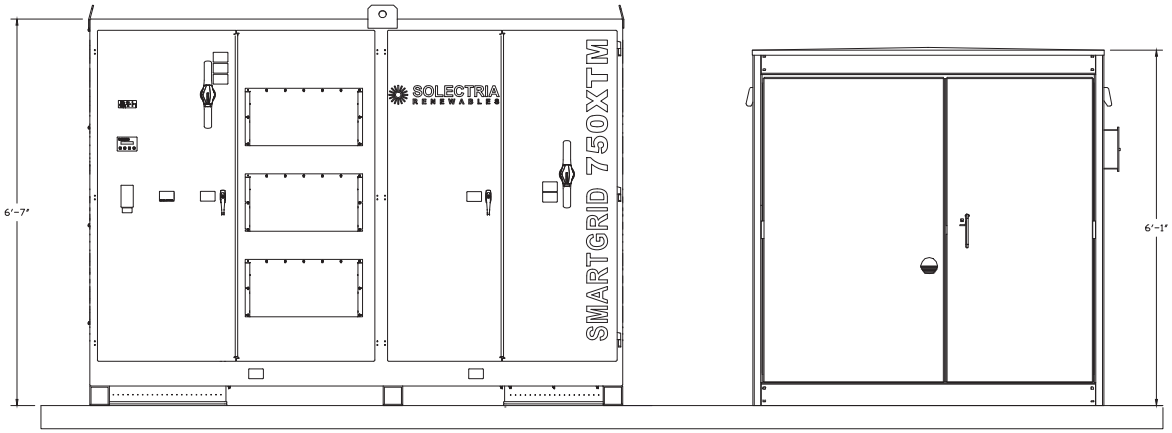

A 1500 kVA BLOCK ELEVATION
SCALE: 1"=1'

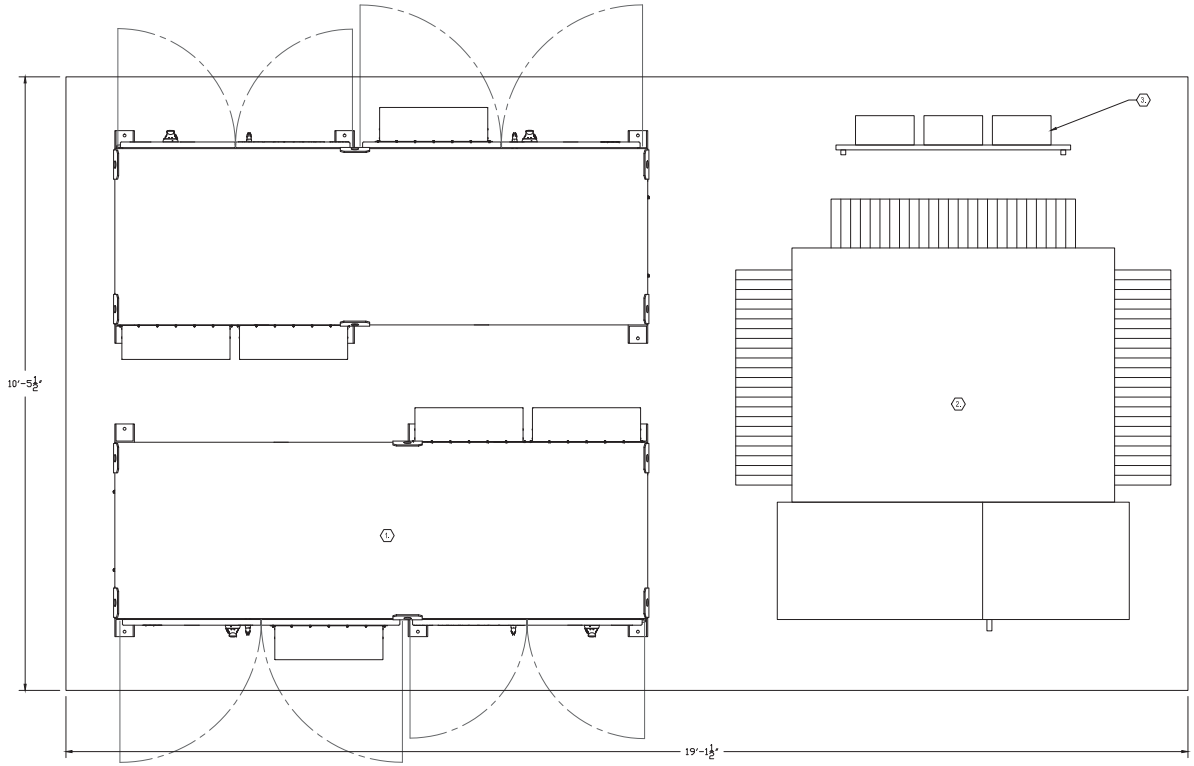

B 1500 kVA BLOCK LAYOUT
SCALE: 1"=1'

THE INFORMATION CONTAINED IN THESE DRAWINGS ARE CONFIDENTIAL AND ARE INTENDED FOR THE DESCRIBED PROJECT ONLY.

NOTES:

1. NONE.

KEYED NOTES:

1. SOLECTRIA SGI 750KVA INVERTER
2. 1500KVA 15KV TRANSFORMER
3. COMMUNICATION RACK

TUUSSO ENERGY

MaxPV ENGINEERING DEVELOPMENT
3131 POLYGON // SACRAMENTO, CA
WWW.MAXPVENGINEERING.COM

REV. NO.	DATE	DESCRIPTION	BY	CHK.	APR.
A	08-09-17	FOR PLAN REVIEW	LB	–	–

OWNER: TUUSSO ENERGY

PROJECT SITE: CAMAS SOLAR PROJECT

DRAWING: EQUIPMENT PAD DETAILS

DRAWING NO. E-401

THIS PRINT IS NOT TO BE USED FOR CONSTRUCTION UNLESS NOTED AND SIGNED OK FOR CONSTRUCTION ABOVE LAST REVISION.

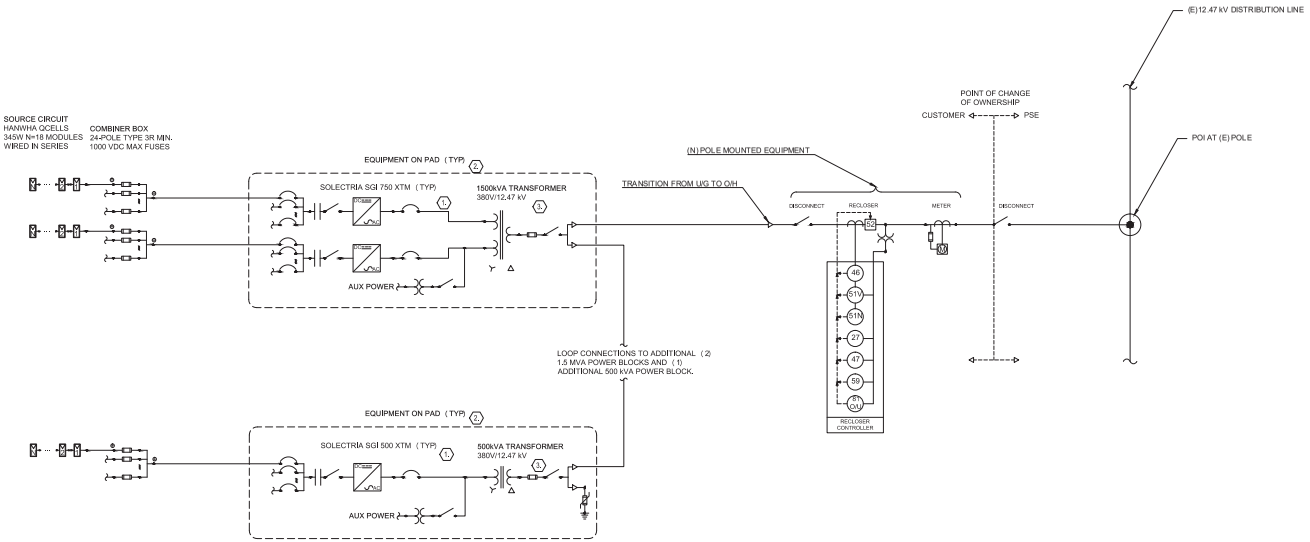

NOTES:

1. NONE.

KEYED NOTES:

1. **PV POWER CONDITIONING SYSTEM:** IEEE 929 AND IEEE 1547 COMPLIANT- 1000VDC MAX INPUT VOLTAGE. INVERTER EQUIPPED WITH INTEGRATED DC CIRCUIT BREAKER COMBINER.
2. EQUIPMENT PAD WITH INVERTER(S), STEP UP TRANSFORMER, AND COMMUNICATION EQUIPMENT.
3. TRANSFORMER SPECIFICATIONS TBD. VERIFY WITH INVERTER MFR & PSE FOR FINAL TRANFORMER CONFIGURATION.

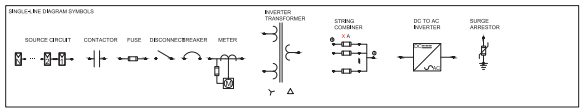

THE INFORMATION CONTAINED IN THESE DRAWINGS ARE CONFIDENTIAL AND ARE INTENDED FOR THE DESCRIBED PROJECT ONLY.

TUUSSO ENERGY

MaxPV ENGINEERING DEVELOPMENT
3131 POLYGON // SACRAMENTO, CA
WWW.MAXPVENGINEERING.COM

REV. NO.	DATE	DESCRIPTION	BY	CHK.	APR.
A	08-09-17	FOR PLAN REVIEW	LB	–	–

OWNER: TUUSSO ENERGY

PROJECT SITE: CAMAS SOLAR PROJECT

DRAWING: SINGLE LINE DIAGRAM

DRAWING NO. E-601

THIS PRINT IS NOT TO BE USED FOR CONSTRUCTION UNLESS NOTED AND SIGNED OK FOR CONSTRUCTION ABOVE LAST REVISION.

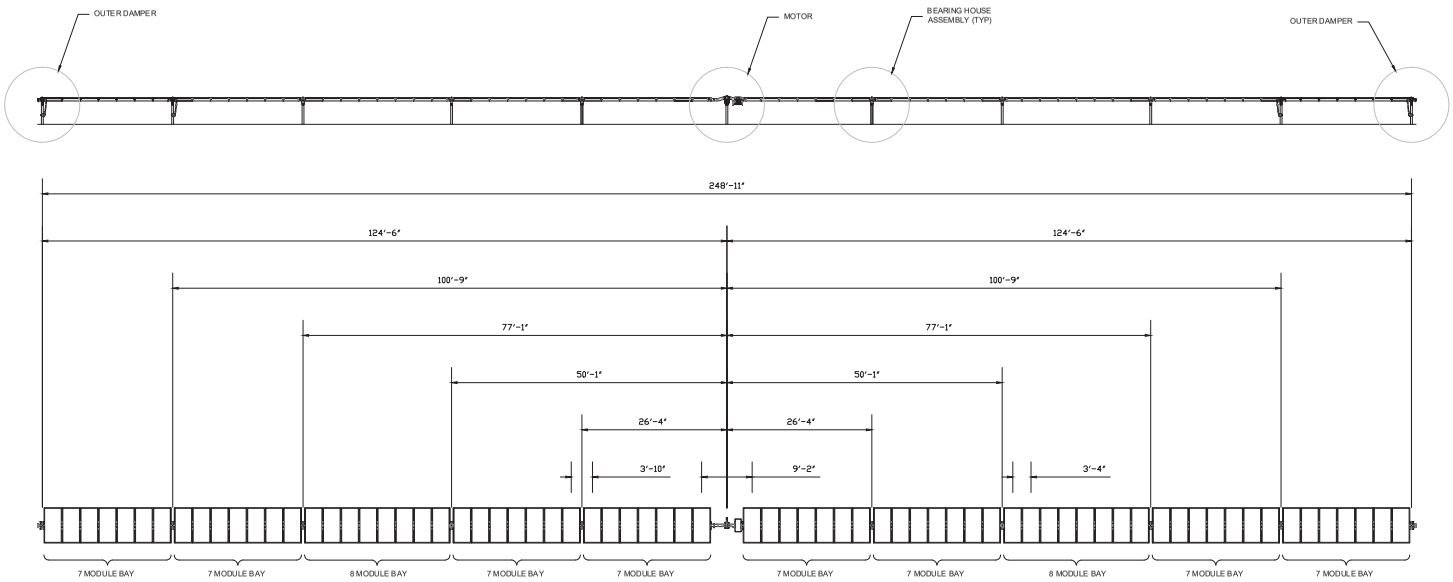

A 72 MODULE TRACKER

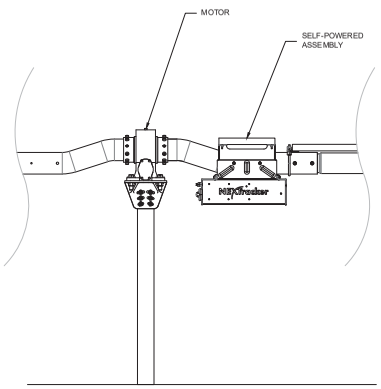

B MOTOR PILE DETAIL

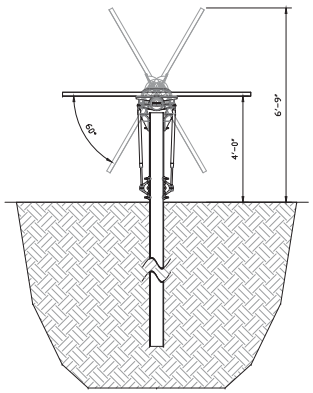

C TRACKER PROFILE

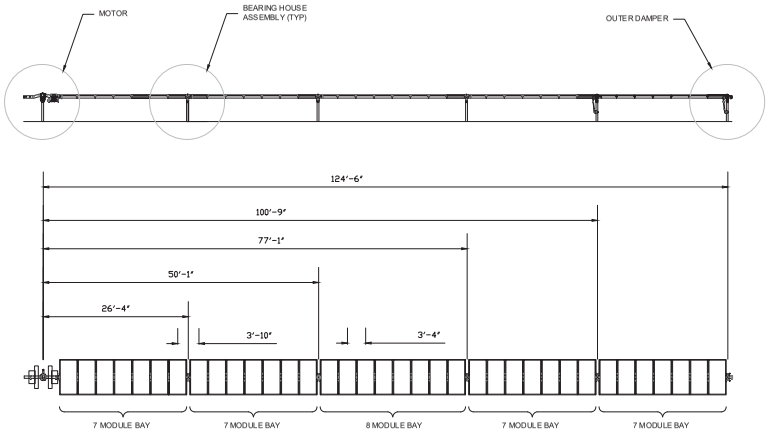

D 36 MODULE TRACKER

NOTES:

1. NONE.

KEYED NOTES:

1. NONE.

TUUSSO ENERGY

MaxPV ENGINEERING DEVELOPMENT
3131 POLYGON // SACRAMENTO, CA
WWW.MAXPVENGINEERING.COM

REV. NO.	DATE	DESCRIPTION	BY	CHK.	APR.
A	08-09-17	FOR PLAN REVIEW	LB	–	–

OWNER: TUUSSO ENERGY

PROJECT SITE: CAMAS SOLAR PROJECT

DRAWING: TRACKER ELEVATIONS

DRAWING NO. E-701

THIS PRINT IS NOT TO BE USED FOR CONSTRUCTION UNLESS NOTED AND SIGNED OK FOR CONSTRUCTION ABOVE LAST REVISION.

THE INFORMATION CONTAINED IN THESE DRAWINGS ARE CONFIDENTIAL AND ARE INTENDED FOR THE DESCRIBED PROJECT ONLY.

The Q.ANTUM solar module Q.PLUS L-G4.2 with power classes up to 345 Wp is the strongest module of its type on the market globally. Powered by 72 Q CELLS solar cells Q.PLUS L-G4.2 was specially designed for large solar power plants to reduce BOS costs. Only Q CELLS offers German engineering quality with our unique triple Yield Security.

LOW ELECTRICITY GENERATION COSTS
Higher yield per surface area and lower BOS costs thanks to higher power classes and an efficiency rate of up to 17.6 %.

INNOVATIVE ALL-WEATHER TECHNOLOGY
Optimal yields, whatever the weather with excellent low-light and temperature behavior.

ENDURING HIGH PERFORMANCE
Long-term yield security with Anti-PID Technology[1], Hot-Spot-Protect and Traceable Quality Tra.Q™.

EXTREME WEATHER RATING
High-tech aluminum alloy frame, certified for high snow (5400 Pa) and wind loads (2400 Pa).

A RELIABLE INVESTMENT
Inclusive 12-year product warranty and 25-year linear performance guarantee[2].

THE IDEAL SOLUTION FOR:

Engineered in Germany

Q CELLS

Our most amazing tracker yet.

In our mission to make solar a mainstream energy source, NEXTracker has engineered the most intelligent and flexible tracking technology yet. Using sustainable design methods with outcomes that benefit people and the planet, we bring you: NX Horizon®.

NX Horizon (formerly referred to as the Self-Powered Tracker or SPT), brings self-contained motor power to each row, eliminating power wiring and trenching. Our advanced horizontal tracker has the widest rotational range available, lowest O&M costs, and requires far less power to operate than other trackers. By offering more powerful systems at a greater value, NEXTracker enables greater deployment of renewable energy worldwide.

NX Horizon key features and benefits include:

– Self-powered system with smart performance communications: Self-contained units on each row include a dedicated PV panel to provide power to the controller which drives thermotor and hosts intelligent control electronics to position each tracker. With smart communications built in, NX Horizon systems can be accessed remotely, providing customers with a granular view to optimize tracker performance, operations and maintenance.

– Independent balanced rows with 120 degree rotational range: Each NX Horizon row has its own controlled motor with rotational range that delivers up to 2% more energy than typical linked row trackers. These agile, independent rows stow in less than 90 seconds to reduce wind forces on the array, protecting the PV modules in harsh environments. NX Horizon solar trackers also have a mechanically balanced row design that align PV panels with the tracker's axis of rotation – which greatly reduces row torque, using less energy from the motor to track throughout the day.

– Self-grounded system with theft-proof fasteners: NX Horizon is the world's first horizontal tracker with an entirely self-grounded design. This means no separate bonding hardware is required. You save on material and associated costs by eliminating grounding washers, braided straps, bare copper wire, and grounding rods. What's more, we've designed our own fasteners that can only be removed with special tools – deterring PV theft.

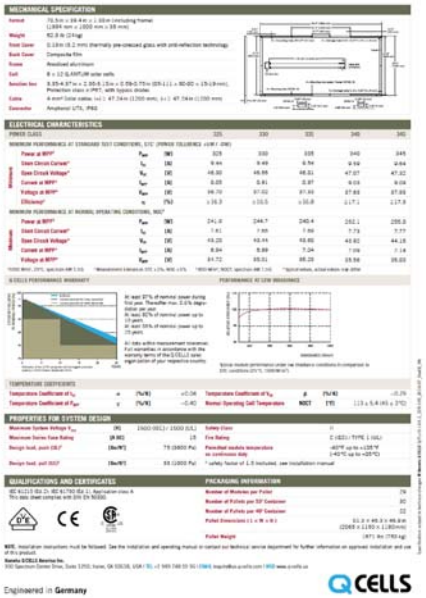

NX Horizon Specifications

Tracking Technology	Horizontal single-axis balanced mass tracker with independently driven rows
Tracking Range	Up to 120° (±60°)
Control System	1 Self-Powered Controller (SPC) per tracker; 1 Network Control Unit (NCU) per 100 SPCs
Communications	Wireless ZigBee® mesh network/SCADA; no communication wiring required
Drive System	One slew gear, 24 VDC motor and self-powered controller w/dedicated solar panel per row
DC Capacity	23.35kWp per tracker row, depending on panel type. Row length up to 90 panels.
System Voltage	1500 volt or 1500 volt
Power Consumption	No grid power required
Ground Coverage Ratio	Fully configurable by customer; typical range 33%-50%
Installation Method	Rapid field assembly, no welding required
Foundation Types	Compatible with all major foundation types (driven pier, concrete foundation, ground screw)
Standard Wind Design	100 mph/161 kph, 3 second gust per ASCE7-10; configurable for higher wind speeds
Safety Stowing	Automated wind and snow stowing with self-contained backup power; no external power required
Torsional Limiter	Included at each foundation/bearing for additional wind and snow load protection
Principal Materials	Galvanized and stainless steel
Grounding Method	Self-grounding structure; separate materials and labor not required
Compliance	Grounding/bonding: UL2703; structural design: ASCE7-10
Other Available Options	Snow and flood sensors
Warranty	10-years on structural components; 5-years on drive and control systems
Typical Dimensions	Height 23 ft/6.8 m @ 60°, Width 20 ft/6.4 ft, Length 85 ft/26.5 ft

Typical 72-cell c-Si configuration: 85 m row with 80 panels mounted in portrait:

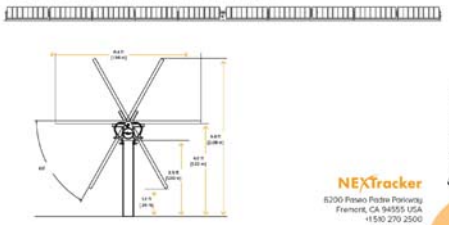

NEXTracker
6200 Paseo Padre Parkway
Fremont, CA 94555 USA
+1510 270 2500
nextracker.com

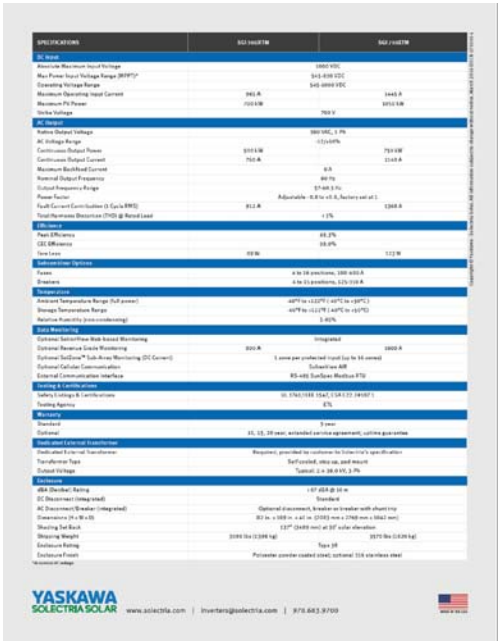

TUUSSO ENERGY

MaxPV ENGINEERING DEVELOPMENT
501 POLVOSO // SACRAMENTO, CA
WWW.MAXPVDEVELOPER.COM

REV. NO.	DATE	DESCRIPTION	BY	CHK.	APR.
A	08-09-17	FOR PLAN REVIEW	LB	–	–

OWNER: TUUSSO ENERGY

PROJECT SITE: CAMAS SOLAR PROJECT

DRAWING: MAJOR EQUIPMENT SPECIFICATIONS

DRAWING NO. E-901

THIS PRINT IS NOT TO BE USED FOR CONSTRUCTION UNLESS NOTED AND SIGNED OK FOR CONSTRUCTION ABOVE LAST REVISION.

THE INFORMATION CONTAINED IN THESE DRAWINGS ARE CONFIDENTIAL AND ARE INTENDED FOR THE DESCRIBED PROJECT ONLY.

TUUSSO ENERGY - FUMARIA SITE

A PORTION OF THE SE ¼ OF SECTION 9, T. 18 N., R. 18 E., W.M.

KITTITAS COUNTY, STATE OF WASHINGTON

VICINITY MAP

N.T.S.

NORTH

SCALE 1" = 100'

SHEET INDEX:

TITLE	NO.
COVER SHEET & OVERALL SITE PLAN	C1.0
NOTES, LEGEND & ABBREVIATIONS	C1.1
TESC, GRADING, AND DRAINAGE PLAN	C2.0
TESC DETAILS AND STANDARD DETAILS	C2.1

NOTES:

1. ALL CONSTRUCTION TECHNIQUES AND MATERIALS SHALL BE IN ACCORDANCE WITH THE CURRENT STATE OR COUNTY STANDARDS (AS APPLICABLE) AND AS SHOWN IN THESE PLANS.
2. BOUNDARY AND TOPOGRAPHIC SURVEY SHOWN HEREON WAS PREPARED BY ENCOMPASS ENGINEERING AND SURVEYING IN MAY 2017 UNDER DIRECT SUPERVISION OF DUSTIN PIERCE, PLS #5560.

PROPERTY INFORMATION:

APPLICANT:	TUUSSO ENERGY, LLC 500 YALE AVE SEATTLE, WA 98109
PARCEL NUMBER:	14033
PARCEL SIZE: TRACT 1A SIZE: TRACT 2A SIZE:	38.99 ACRES 35.24 ACRES (SITE) 3.75 ACRES
PROPERTY ADDRESS:	TBD ELLENSBURG, WA 98926
ZONE: IRRIGATION DISTRICT:	AGRICULTURAL KITTITAS RECLAMATION DISTRICT

INDEX LOCATION

SEC. 9 T. 18 N.R. 18 E.W.M.

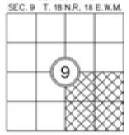

811

Know what's below. Call before you dig.

REVISIONS

DESCRIPTION	BY	DATE

© THE PLANS SET FORTH ON THIS SHEET ARE AND SHALL REMAIN THE PROPERTY OF ENCOMPASS ENGINEERING & SURVEYING.

TUUSSO ENERGY, LLC

FUMARIA SITE

COVER SHEET & OVERALL SITE PLAN

Encompass ENGINEERING & SURVEYING

Western Washington Division
163 NE Juniper Street, Suite 201 • Issaquah, WA 98027 • Phone: (425) 392-0250 • Fax: (425) 391-3055

Eastern Washington Division
407 Sunflower Blvd. • Cle Elum, WA 98922 • Phone: (509) 674-7433 • Fax: (509) 674-7419

JOB NO.	17016
DATE	Sept. 27 2017
SCALE	AS SHOWN
DESIGNED	SF
DRAWN	SF
CHECKED	TML
APPROVED	TML
SHEET	C1.0

STANDARD PLAN NOTES:

1. ALL CONSTRUCTION TECHNIQUES AND MATERIALS SHALL BE IN ACCORDANCE WITH THE CURRENT STATE OR COUNTY STANDARDS AND AS SHOWN IN THESE PLANS.
2. A COPY OF THE APPROVED PLANS MUST BE ON SITE WHENEVER CONSTRUCTION IS IN PROGRESS.
3. THE CONTRACTOR SHALL OBTAIN ALL PERMITS REQUIRED FOR WORK THAT ARE NOT PROVIDED BY THE OWNER PRIOR TO START OF CONSTRUCTION.
4. PAVED OR SIMILAR ESTABLISHED SURFACES INCLUDING ROADWAYS, SIDEWALKS AND CURBS THAT ARE TO REMAIN BUT ARE DAMAGED BY NEW CONSTRUCTION SHALL BE REPAIRED AS REQUIRED BY THE INSPECTOR.
5. ALL SURVEYING AND STAKING OF IMPROVEMENTS SHALL BE APPROVED BY THE OWNER. CONTRACTOR SHALL COORDINATE AND VERIFY WITH THE OWNER PRIOR TO OBTAINING STAKING SERVICES.
6. THE CONTRACTOR SHALL NOTIFY THE KITTITAS COUNTY FIRE DISTRICT (509-386-1495) TWENTY-FOUR (24) HOURS IN ADVANCE OF ALL WATER SERVICE INTERRUPTIONS, HYDRANT SHUT-OFFS, AND STREET CLOSURES OR OTHER ACCESS BLOCKAGE. THE CONTRACTOR SHALL ALSO NOTIFY THE DISTRICT OF ALL NEW, RELOCATED, OR ELIMINATED HYDRANTS RESULTING FROM THIS WORK.
7. ALL LOCATIONS OF EXISTING UTILITIES SHOWN HEREON HAVE BEEN ESTABLISHED BY FIELD SURVEY OR OBTAINED FROM AVAILABLE RECORDS AND SHOULD THEREFORE BE CONSIDERED APPROXIMATE ONLY AND NOT NECESSARILY COMPLETE. IT IS THE SOLE RESPONSIBILITY OF THE CONTRACTOR TO INDEPENDENTLY VERIFY THE ACCURACY OF ALL UTILITY LOCATIONS SHOWN AND TO FURTHER DISCOVER AND AVOID ANY OTHER UTILITIES NOT SHOWN HEREON WHICH MAY BE AFFECTED BY THE IMPLEMENTATION OF THIS PLAN.
8. THE CONTRACTOR SHALL LOCATE AND PROTECT ALL ACTIVE CASTINGS AND UTILITIES DURING CONSTRUCTION AND SHALL CONTACT THE UNDERGROUND UTILITIES LOCATOR SERVICE (1-800-424-5555 OR 811) AT LEAST 48 HOURS PRIOR TO CONSTRUCTION.
9. THE CONTRACTOR SHALL ADJUST ALL EXISTING MANHOLE RIMS, DRAINAGE STRUCTURE LIDS, VALVE BOXES AND UTILITY ACCESS STRUCTURES TO FINISH GRADE WITHIN AREAS AFFECTED BY THE PROPOSED IMPROVEMENTS.
10. THE CONTRACTOR SHALL PROVIDE FOR ALL COMPACTION TESTS REQUIRED BY THE INSPECTOR.
11. BACKFILL MATERIAL SHALL MEET STATE OR COUNTY STANDARDS.
12. INSPECTION AND ACCEPTANCE OF ALL WORK WILL BE ACCOMPLISHED BY THE DESIGNATED INSPECTOR. IT SHALL BE THE CONTRACTOR'S RESPONSIBILITY TO COORDINATE AND SCHEDULE APPROPRIATE INSPECTIONS, ALLOWING PROPER ADVANCE NOTICE. THE INSPECTOR MAY REQUIRE RECONSTRUCTION OF ITEMS THAT DO NOT MEET THE CONTRACT DOCUMENTS OR THAT WERE CONSTRUCTED WITHOUT INSPECTION.
13. THE CONTRACTOR SHALL PROVIDE AND MAINTAIN BEST MANAGEMENT PRACTICES AS SHOWN HEREIN TO INSURE THAT SEDIMENT-LADEN WATER DOES NOT ENTER THE WATER OF THE STATE. AS CONSTRUCTION PROGRESSES AND UNEXPECTED (SEASONAL) CONDITIONS DICTATE, ADDITIONAL BEST MANAGEMENT PRACTICES MAY BE REQUIRED. THEREFORE, DURING THE COURSE OF CONSTRUCTION IT SHALL BE THE OBLIGATION AND RESPONSIBILITY OF THE CONTRACTOR TO ADDRESS ANY NEW CONDITIONS THAT MAY BE CREATED BY HIS ACTIVITIES AND TO PROVIDE ADDITIONAL FACILITIES THAT MAY BE NEEDED TO PROTECT ADJACENT PROPERTIES.
14. THE CONTRACTOR SHALL KEEP ALL STREETS AND PUBLIC RIGHT-OF-WAY CLEAN AT ALL TIMES BY SWEEPING.
15. CONTRACTOR SHALL PROVIDE TRAFFIC CONTROL AS NECESSARY THROUGHOUT THE PROJECT. TRAFFIC CONTROL SHALL BE IN ACCORDANCE WITH THE MUTCD, STATE, AND/OR COUNTY STANDARDS.
16. CONTRACTOR SHALL NOT MAKE ANY REVISIONS IN THE FIELD WITHOUT PRIOR WRITTEN APPROVAL BY THE ENGINEER.
17. THE CONTRACTOR SHALL BE RESPONSIBLE FOR PROVIDING ADEQUATE SAFEGUARDS, SAFETY DEVICES, PROTECTIVE EQUIPMENT, FLAGGERS, AND ANY OTHER NEEDED ACTIONS TO PROTECT THE LIFE, HEALTH, AND SAFETY OF THE PUBLIC, AND TO PROTECT PROPERTY IN CONNECTION WITH THE PERFORMANCE OF WORK COVERED BY THE CONTRACTOR. ANY WORK WITHIN THE TRAVELED RIGHT-OF-WAY THAT MAY INTERRUPT NORMAL TRAFFIC FLOW SHALL REQUIRE AT LEAST ONE FLAGGER FOR EACH LANE OF TRAFFIC AFFECTED. ALL SECTIONS OF THE WSDOT STANDARD SPECIFICATIONS 1-07.23 – TRAFFIC CONTROL, SHALL APPLY.
18. ANY TRENCH DEEPER THAN 5 FEET WILL REQUIRE SHORING FOR TRENCH WALL STABILIZATION.

GENERAL TESC NOTES:

1. APPROVAL OF THIS TEMPORARY EROSION AND SEDIMENTATION CONTROL (TESC) PLAN DOES NOT CONSTITUTE AN APPROVAL OF PERMANENT ROAD OR DRAINAGE DESIGN (E.G. SIZE AND LOCATION OF ROADS, PIPES, RESTRICTORS, CHANNELS, RETENTION FACILITIES, UTILITIES, ETC.).
2. THE IMPLEMENTATION OF THESE TESC PLANS AND THE CONSTRUCTION, MAINTENANCE, REPLACEMENT, AND UPGRADING OF THESE TESC FACILITIES IS THE RESPONSIBILITY OF THE APPLICANT OR A TESC SUPERVISOR UNTIL ALL CONSTRUCTION IS APPROVED.
3. THE BOUNDARIES OF THE CLEARING LIMITS SHOWN ON THIS PLAN SHALL BE CLEARLY FLAGGED BY A CONTINUOUS LENGTH OF SURVEY TAPE (OR FENCING, IF REQUIRED) PRIOR TO CONSTRUCTION. DURING THE CONSTRUCTION PERIOD, NO DISTURBANCE BEYOND THE CLEARING LIMITS SHALL BE PERMITTED. THE CLEARING LIMITS SHALL BE MAINTAINED BY THE APPLICANT/TESC SUPERVISOR FOR THE DURATION OF CONSTRUCTION.
4. THE TESC FACILITIES SHOWN ON THIS PLAN MUST BE CONSTRUCTED PRIOR TO OR IN CONJUNCTION WITH ALL CLEARING AND GRADING SO AS TO ENSURE THAT THE TRANSPORT OF SEDIMENT TO SURFACE WATERS, DRAINAGE SYSTEMS, AND ADJACENT PROPERTIES IS MINIMIZED.
5. THE TESC FACILITIES SHOWN ON THIS PLAN ARE THE MINIMUM REQUIREMENTS FOR ANTICIPATED SITE CONDITIONS. DURING THE CONSTRUCTION PERIOD, THESE TESC FACILITIES SHALL BE UPGRADED AS NEEDED FOR UNEXPECTED STORM EVENTS AND MODIFIED TO ACCOUNT FOR CHANGING SITE CONDITIONS (E.G. ADDITIONAL SUMP PUMPS, RELOCATION OF DITCHES AND SILT FENCES, ETC.).
6. ANY AREAS OF EXPOSED SOILS, INCLUDING ROADWAY EMBANKMENTS, THAT WILL NOT BE DISTURBED FOR TEN DAYS DURING THE WET SEASON OR FOURTEEN DAYS DURING THE DRY SEASON SHALL BE IMMEDIATELY STABILIZED WITH THE APPROVED TESC METHODS (E.G., SEEDING, MULCHING, PLASTIC COVERING, ETC.).
7. ANY AREA NEEDING TESC MEASURES, NOT REQUIRING IMMEDIATE ATTENTION, SHALL BE ADDRESSED WITHIN FIFTEEN (15) DAYS.
8. THE TESC FACILITIES ON INACTIVE SITES SHALL BE INSPECTED AND MAINTAINED A MINIMUM OF ONCE A MONTH OR WITHIN 48 HOURS FOLLOWING A STORM EVENT.
9. AT NO TIME SHALL MORE THAN ONE (1) FOOT OF SEDIMENT BE ALLOWED TO ACCUMULATE WITHIN A CATCH BASIN. ALL CATCH BASINS AND CONVEYANCE LINES SHALL BE CLEANED PRIOR TO PAVING. THE CLEANING OPERATION SHALL NOT FLUSH SEDIMENT-LADEN WATER INTO THE DOWNSTREAM SYSTEM.
10. STABILIZED CONSTRUCTION ENTRANCES AND ROADS SHALL BE INSTALLED AT THE BEGINNING OF CONSTRUCTION AND MAINTAINED FOR THE DURATION OF THE PROJECT. ADDITIONAL MEASURES, SUCH AS WASH PADS, MAY BE REQUIRED TO ENSURE THAT ALL PAVED AREAS ARE KEPT CLEAN FOR THE DURATION OF THE PROJECT.
11. ANY PERMANENT RETENTION/DETENTION FACILITY USED AS A TEMPORARY SETTLING BASIN SHALL BE MODIFIED WITH THE NECESSARY EROSION CONTROL MEASURES AND SHALL PROVIDE ADEQUATE STORAGE CAPACITY. IF THE PERMANENT FACILITY IS TO FUNCTION ULTIMATELY AS AN INFILTRATION SYSTEM, THE TEMPORARY FACILITY MUST BE GRADED SO THAT THE BOTTOM AND SIDES ARE AT LEAST ONE FOOT ABOVE THE FINAL GRADE OF THE PERMANENT FACILITY.
12. WHERE STRAW MULCH FOR TEMPORARY EROSION CONTROL IS REQUIRED, IT SHALL BE APPLIED AT A MINIMUM THICKNESS OF TWO INCHES

STANDARD GRADING NOTES:

1. ALL GRADING ACTIVITIES, INCLUDING EXCAVATION, BACKFILL AND COMPACTION, SHALL BE DONE IN ACCORDANCE WITH STATE OR COUNTY STANDARDS AS APPLICABLE.
2. WITHIN ANY AREAS TO RECEIVE STRUCTURAL FILL, PAVEMENTS OR HARDSCAPE, THE SUBGRADE SHALL BE SCARIFIED, MOISTURE CONDITIONED, AND COMPACTED TO AT LEAST 95% MAXIMUM DENSITY (ASTM D 1557).
3. CONTRACTOR SHALL OBTAIN AN APPROVAL BY THE GEOTECHNICAL ENGINEER PRIOR TO PROCEEDING WITH ANY OVEREXCAVATION. CONTRACTOR SHALL VERIFY THE AMOUNT OF OVEREXCAVATION WITH GEOTECHNICAL ENGINEER.
4. COMPACTION SHALL BE DONE PER STATE OR COUNTY STANDARDS AS APPLICABLE. SITE EXCAVATION AND/OR SUBGRADE PREPARATION SHALL BE COMPLETED BEFORE PLACING STRUCTURAL FILL. COMPACTION SHALL BE VERIFIED BY DENSITY TESTING.
5. ALL TEMPORARY CUT SLOPES SHALL NOT EXCEED 1.5H:1V. ALL PERMANENT CUT SLOPES SHALL NOT EXCEED 2H:1V OR AS SHOWN ON PLANS. ALL PERMANENT FILL SLOPES SHALL NOT EXCEED 2H:1V.
6. CONTRACTOR SHALL IMPLEMENT APPROPRIATE PROTECTION AND TRAFFIC CONTROL DURING CONSTRUCTION TO DIRECT TRUCK TRAFFIC.
7. ANY AND ALL FILL MATERIAL PLACED ON THE LOT SHALL BE COMPACTED AND A COMPACTION INSPECTION REPORT FOR THE COMPACTION AND BEARING CAPACITY OF THAT FILL MATERIAL SHALL BE PROVIDED TO THE STATE OR COUNTY AS APPLICABLE WITHIN 60 DAYS OF THE PLACEMENT OF THE FILL MATERIAL.
8. ALL EXCESS SOIL SHALL BE OFF-HAULED TO A LEGAL DISPOSAL SITE. NO EXCESS SOIL SHALL BE SPREAD ON THE SITE WITHOUT CLEARLY BEING SHOWN ON THE APPROVED GRADING PLAN.
9. ALL CUT AND FILL SLOPES AND ALL EXPOSED DIRT SHALL BE PLANTED, WATERED AND MAINTAINED UNTIL EFFECTIVE EROSION CONTROL HAS BEEN ESTABLISHED TO THE SATISFACTION OF THE STATE OR COUNTY AS APPLICABLE.
10. CONTRACTOR SHALL PROVIDE HIS/HER OWN EARTHWORK CALCULATIONS FOR ALL CUT AND FILL OPERATIONS.

ABBREVIATIONS:

AC – ASPHALT CONCRETE
ACP – ABESTOS CEMENT PIPE
ADD'L – ADDITIONAL
AD – AREA DRAIN
ADJ – ADJACENT
ANSI – AMERCIAN NATIONAL STANDARDS INSTITUTE
ALT – ALTERNATE
ALUM – ALUMINUM
APPROX – APPROXIMATE(LY)
ARCH – ARCHITECT(URAL)
AP – ANGLE POINT
ASPH – ASPHALT
ASSY – ASSEMBLY
ASTM – AMERICAN SOCIETY OF TESTING AND MATERIALS
AVE – AVENUE
BC – BACK OF CURB
BF – BLIND FLANGE
BLDG – BUILDING
BLDG – BUILDING CORNER
BLK – BLOCK
BLVD – BOULEVARD
BM – BENCHMARK
BNDY – BOUNDARY
BO – BLOW OFF
BOW – BOTTOM OF WALL (AT FINISHED GRADE)
BSBL – BUILDING SETBACK LINE
BVC – BEGINNING OF VERTICAL CURVE
BVCE – BEGIN VERTICAL CURVE ELEVATION
BVCS – BEGIN VERTICAL CURVE STATION
BW – BACK OF WALK
CB – CATCH BASIN
CF – CUBIC FEET (FOOT)
CIP – CAST IRON PIPE
CJ – CONSTRUCTION JOINT
CL – CLASS
C/L – CENTER LINE
CLR – CLEARENCE
CMP – CORRUGATED METAL PIPE
CO – CLEAN OUT
CONN – CONNECTION
CONT – CONTINUOUS (CONTINUED)
CONTR – CONTRACTOR
C, CONC – CONCRETE
CONST – CONSTRUCTION
CP – CONTROL POINT
CFS – CUBIC FEET PER SECOND
CTR – CENTER(ED)
CTV – CABLE TV
C&G – CURB AND GUTTER
CY – CUBIC YARD
DCVA – DOUBLE CHECK VALVE ASSEMBLY
DDCV – DOUBLE DETECTOR CHECK VALVE
DEPT. – DEPARTMENT
DET – DETAIL OR DETENTION
DIP – DUCTLE IRON PIPE
DIA(S) – DIAMETER
DIM – DIMENSION
DOT – DEPARTMENT OF TRANSPORTATION
DS – DOWN SPOUT
DWG – DRAWING
E – EAST(ING)
EA – EACH
EL – ELEVATION
ELEC – ELECTRICAL
EP – EDGE OF PAVEMENT
EQUIV – EQUIVALENT
EVC – END OF VERTICAL CURVE
EVCE – END OF VERTICAL CURVE ELEVATION
EVCS – END OF VERTICAL CURVE STATION
EX, EXIST – EXISTING
FC – FACE OF CURB
FD – FLOOR DRAIN
FDC – FIRE DEPARTMENT CONNECTION
FFE – FINISH FLOOR ELEVATION
FH – FIRE HYDRANT
FL – FLANGED OR FLOW LINE
FLR – FLOOR
FS – FINISHED SURFACE
FT (') – FOOT (FEET)
FTG – FOOTING
G – GAS MAIN
GA – GAUGE
GALV – GALVANIZED
GB – GRADE BREAK
GM– GAS METER
GRD – GRADE
HB – HOSE BIBB
HDPE – HIGH DENSITY POLYETHYLENE
HORIZ (H) – HORIZONTAL
HT – HEIGHT
HYD – HYDRANT
ID – INSIDE DIAMETER
E – INVERT ELEVATION
IN (") – INCHES
INV – INVERT
IRR – IRRIGATION WATER
L – LENGTH
LB, # – POUND(S)
LF – LINEAR FEET
LN – LANE
MAT'L – MATERIAL
MAX – MAXIMUN
MFR – MANUFACTURER
MH – MANHOLE
MIN – MINIMUM
MISC – MISCELLANEOUS
MJ – MECHANICAL JOINT
N – NORTH(ING)
NO (#) – NUMBER
N.T.S. – NOT TO SCALE
O.C. – ON CENTER
O.D. – OUTSIDE DIAMETER
O/W – OIL WATER
P – POWER
PC – POINT OF CURVATURE
PERF – PERFORATED
PI – POINT OF INTERSECTION
PIV – POST INDICTOR VALVE
PL – PROPERTY LINE
PP – POWER POLE
PROV – PROVIDED
PSF – POUNDS PER SQUARE FOOT
PSI – POINDS PER SQUARE INCH
PT – POINT OF TANGENCY
PVC – POLYVINYL CHLORIDE
PVI – POINT OF VERTICAL INTERSECTION
PVMT – PAVEMENT
PVT – POINT OF VERTICAL TANGENT
QTY – QUANTITY
RAD (R) – RADIUS
RCP – REINFORCED CONCRETE PIPE
RD – ROAD
REF – REFERENCE
REINF – REINFORCED
REQ – REQUIRED
RET – RETAINING
ROW – RIGHT-OF-WAY
RR – RAILROAD
S – SOUTH
S, SL – SLOPE
SCH – SCHEDULE
SD – STORM DRAIN
SF – SQUARE FOOT
SHT – SHEET
SIM – SIMILAR
SPEC – SPECIFICATION(S)
SQ – SQUARE
SS – SANITARY SEWER
ST – STREET
STA – STATION
STD – STANDARD
STL – STEEL
T – TELEPHONE WIRE
TBM – TEMPORARY BENCH MARK
TC – TOP OF CURB
TEMP – TEMPORARY
TG/RIM – TOP OF GRATE/RIM
THRU – THROUGH
TOE – TOE OF WALL OR SLOPE
TOP – TOP OF WALL OR SLOPE
TOW – TOP OF WALL
TYP – TYPICAL
VC – VERTICAL CURVE
VOL – VOLUME
W – WEST
W/ – WITH
WM – WATER METER
W/O – WITHOUT
WQ – WATER QUALITY
WT – WEIGHT
WWF – WELDED WIRE FABRIC
WV – WATER VALVE
YD – YARD DRAIN

LEGEND

	EXISTING:	PROPOSED:
BOUNDARY LINE/RIGHT-OF-WAY		
LOT LINE		
STREET MONUMENT (IN CONCRETE)		
PROPERTY CORNER		
BENCHMARK/CONTROL POINT		
TEMPORARY BENCHMARK	TBM	TBM
EASEMENT LINE		
CENTERLINE		
CURB/GUTTER/SIDEWALK LINE		
EDGE OF PAVEMENT LINE		
CHAIN LINK FENCE LINE		
SIGN		
STREET LIGHT (ELECTROLIER)		
GRADE BREAK LINE		
CONTOUR LINE (MAJOR)	1650	1650
CONTOUR LINE (MINOR)	1651	1651
CATCH BASIN (TYPE 1)		
STORM DRAIN MANHOLE/CATCH BASIN TYPE 2		
STORM DRAIN LINE	SD	
CONTROL STRUCTURE		
RIP-RAP PAD		
SANITARY SEWER LINE	SS	
SANITARY SEWER CLEANOUT		
SANITARY SEWER MANHOLE		
WATERMAIN LINE	W	
GATE VALVE (MECHANICAL JOINT)		
GATE VALVE (FLANGE)		
WATER METER		
FIRE HYDRANT		
CAP		
GAS LINE	G	G
GAS VALVE		
UNDERGROUND ELECTRIC LINE	E	E
POWER POLE / UTILITY POLE		
GUY ANCHOR		
ELECTRICAL TRANSFORMER / VAULT	P	P
TELEPHONE VAULT/PEDESTAL	T	T
TELEPHONE MANHOLE	T	T
100-YR FLOODPLAIN HATCH		
CONCRETE HATCH		
GRAVEL HATCH		
ALL WEATHER ROAD HATCH (COMPACTED SOIL OR GRAVEL)		

CONTRACTOR RESPONSIBILITY:

CONTRACTOR AGREES THAT HE SHALL ASSUME SOLE AND COMPLETE RESPONSIBILITY FOR JOB SITE CONDITIONS, INCLUDING THE SAFETY OF ALL PERSONS AND PROPERTY, DURING THE COURSE OF CONSTRUCTION OF THIS PROJECT, AND THAT THIS REQUIREMENT SHALL APPLY CONTINUOUSLY AND NOT BE LIMITED TO NORMAL WORKING HOURS. THE CONTRACTOR SHALL DEFEND, INDEMNIFY AND HOLD THE OWNER AND THE ENGINEER HARMLESS FROM ANY AND ALL LIABILITY, REAL OR ALLEGED, IN CONNECTION WITH THE PERFORMANCE OF WORK ON THIS PROJECT, EXCEPTING FOR LIABILITY ARISING FROM THE SOLE NEGLIGENCE OF THE OWNER OR THE ENGINEER.

DISCREPANCIES:

IF THERE ARE ANY DISCREPANCIES BETWEEN DIMENSIONS IN DRAWINGS AND EXISTING CONDITIONS WHICH WILL AFFECT THE WORK, THE CONTRACTOR SHALL BRING SUCH DISCREPANCIES TO THE ATTENTION OF THE ENGINEER FOR ADJUSTMENT BEFORE PROCEEDING WITH THE WORK. THE CONTRACTOR SHALL BE RESPONSIBLE FOR THE PROPER FITTING OF ALL WORK AND FOR THE COORDINATION OF ALL TRADES, SUBCONTRACTORS, AND PERSONS ENGAGED UPON THIS CONTRACT.

REVISIONS		
DESCRIPTION	BY	DATE

© THE PLANS SET FORTH ON THIS SHEET ARE AND SHALL REMAIN THE PROPERTY OF ENCOMPASS ENGINEERING & SURVEYING

TODD MICROULIS HOWARD
STATE OF WASHINGTON
40995
REGISTERED
PROFESSIONAL ENGINEER

TUUSSO ENERGY, LLC
FUMARIA SITE
NOTES, LEGEND & ABBREVIATIONS

Encompass
ENGINEERING & SURVEYING
Western Washington Division
165 NE Juniper Street, Suite 201 ■ Issaquah, WA 98027 ■ Phone: (425) 392-0250 ■ Fax: (425) 391-3055
Eastern Washington Division
407 Stellhorse Blvd ■ Cle Elum, WA 98922 ■ Phone: (509) 674-7433 ■ Fax: (509) 674-7419

JOB NO.	17016
DATE	Sept. 27 2017
SCALE	AS SHOWN
DESIGNED	SF
DRAWN	SF
CHECKED	TML
APPROVED	TML
SHEET	C1.1

TUUSSO ENERGY - FUMARIA SITE

A PORTION OF THE SE $\frac{1}{4}$ OF SECTION 9, T. 18 N., R. 18 E., W.M.

KITTITAS COUNTY, STATE OF WASHINGTON

SYSTEM SUMMARY	
kWDC	5,961.6
kVAAC	5,000.0
INVERTER QTY.	5
MODULE QTY.	17,280
DC SYSTEM VOLTAGE (V)	1000
DC SYSTEM VOLTAGE (kV)	12.47
INVERTER AC RATING (KVA)	1000
PV MODULE MODEL #	QCELLS 345W
PV MODULE NAMEPLATE (W)	345
RACKING SYSTEM	NEXTRACKER
GROUND COVERATE RATIO	0.33
DC:AC RATIO	1.19
MODULE TILT	TRACKER, +/-60°

LEGEND

- INVERTER STATION
- 72 MODULE TRACKER
- 54 MODULE TRACKER
- 36 MODULE TRACKER

NORTH

05 25 50 100

SCALE 1" = 100'

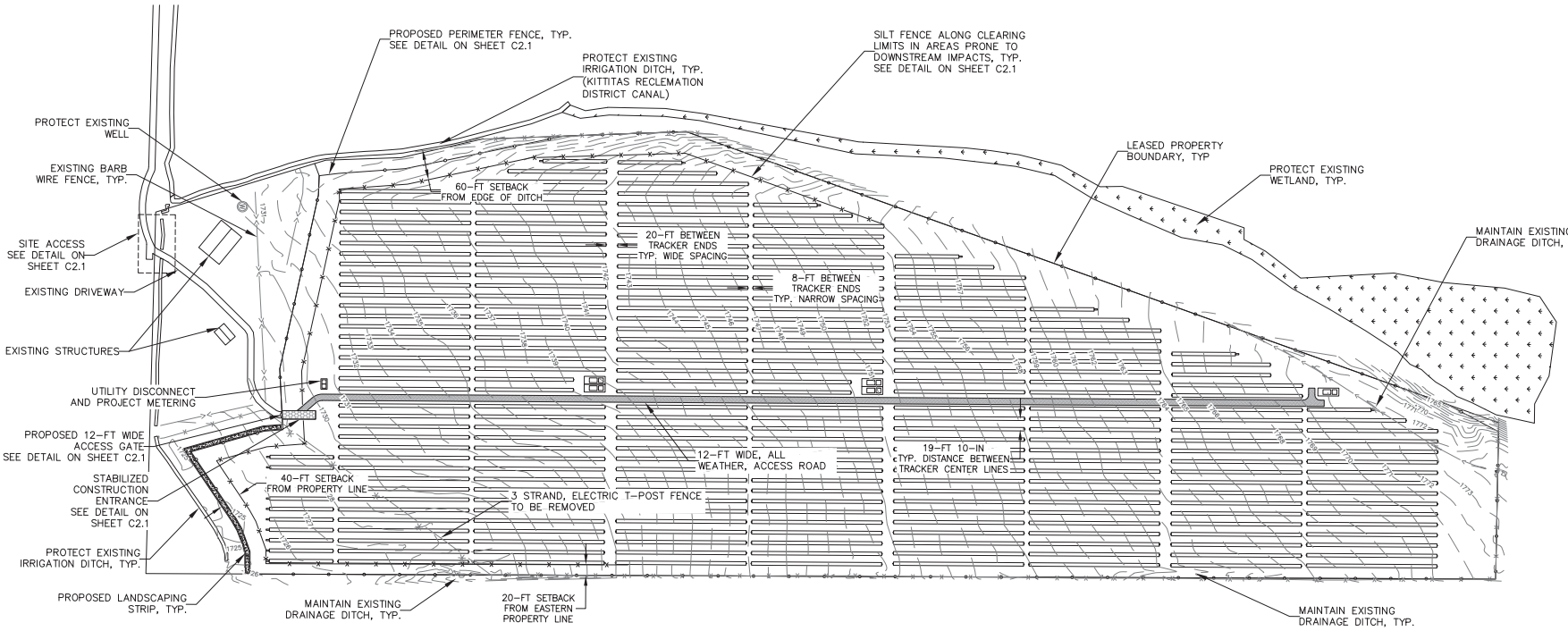

SHEET NOTES:

1. REFER TO STANDARD PLAN NOTES ON SHEET C1.1.
2. ALL CONSTRUCTION SHALL BE IN ACCORDANCE WITH STATE OR COUNTY STANDARDS AS APPLICABLE. IT SHALL BE THE SOLE RESPONSIBILITY OF THE APPLICANT AND THE PROFESSIONAL CIVIL ENGINEER TO CORRECT ANY ERROR, OMISSION, OR VARIATION FROM THE ABOVE REQUIREMENTS FOUND IN THESE PLANS.
3. THE CONTRACTOR SHALL BE RESPONSIBLE FOR PROVIDING ADEQUATE SAFEGUARDS, SAFETY DEVICES, PROTECTIVE EQUIPMENT, FLAGGERS, AND ANY OTHER NEEDED ACTIONS TO PROTECT THE LIFE, HEALTH, AND SAFETY OF THE PUBLIC, AND TO PROTECT PROPERTY IN CONNECTION WITH THE PERFORMANCE OF WORK COVERED BY THE CONTRACTOR. ANY WORK WITHIN THE TRAVELED RIGHT-OF-WAY THAT MAY INTERRUPT NORMAL TRAFFIC FLOW SHALL REQUIRE AT LEAST ONE FLAGGER FOR EACH LANE OF TRAFFIC AFFECTED. ALL SECTIONS OF THE WSDOT STANDARD SPECIFICATIONS 1-07.23 - TRAFFIC CONTROL, SHALL APPLY.
4. ANY TRENCH DEEPER THAN 5 FEET WILL REQUIRE SHORING FOR TRENCH WALL STABILIZATION.

TESC NOTES:

1. SILT FENCE TO BE INSTALLED AS STAND-ALONE UNLESS RUNNING ALONG EXIST. FENCE.
2. CONTRACTOR'S STAGING AREA AND STOCKPILE AREAS SHALL BE DETERMINED PRIOR TO START OF CONSTRUCTION.

RECOMMENDED CONSTRUCTION SEQUENCE:

(1) PRE-CONSTRUCTION MEETING.
(2) GRADE AND INSTALL CONSTRUCTION ENTRANCE(S).
(3) INSTALL PERIMETER PROTECTION (SILT FENCE, BRUSH BARRIER, ETC.).
(4) GRADE AND STABILIZE CONSTRUCTION ROADS.
(5) INSTALL WIDE FLANGE STEEL PILES.
(6) INSTALL ELECTRICAL UNDERGROUND AND MECHANICAL TRACKERS
(7) INSTALL PANELS
(8) PERFORM ANY REQUIRED SITE RESTORATION

TESC LEGEND:

SILT FENCE - SEE DETAIL ON SHEET C2.1

CONSTRUCTION ENTRANCE - SEE DETAIL ON SHEET C2.1

REVISIONS		
DESCRIPTION	BY	DATE

© THE PLANS SET FORTH ON THIS SHEET ARE AND SHALL REMAIN THE PROPERTY OF ENCOMPASS ENGINEERING & SURVEYING.

TUUSSO ENERGY, LLC

FUMARIA SITE

TESC, GRADING, AND DRAINAGE PLAN

Encompass ENGINEERING & SURVEYING
Western Washington Division
165 NE Juniper Street, Suite 201 ■ Issaquah, WA 98027 ■ Phone: (425) 392-0250 ■ Fax: (425) 391-3055
407 Swiftwater Blvd. ■ Cle Elum, WA 98922 ■ Phone: (509) 674-7433 ■ Fax: (509) 674-7419
Eastern Washington Division

JOB NO.	17016
DATE	Sept. 27 2017
SCALE	AS SHOWN
DESIGNED	SF
DRAWN	SF
CHECKED	TML
APPROVED	TML
SHEET	C2.0

TUUSSO ENERGY - FUMARIA SITE

A PORTION OF THE SE $\frac{1}{4}$ OF SECTION 9, T. 18 N., R. 18 E., W.M.

KITTITAS COUNTY, STATE OF WASHINGTON

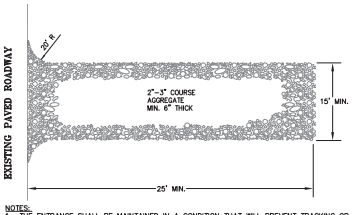

NOTES:
1. THE ENTRANCE SHALL BE MAINTAINED IN A CONDITION THAT WILL PREVENT TRACKING OR FLOWING OF SEDIMENT ONTO PUBLIC RIGHTS-OF-WAY. THIS MAY REQUIRE TOP DRESSING, REPAIR AND/OR CLEANOUT OF ANY MEASURES USED TO TRAP SEDIMENT.
2. WHEN NECESSARY, WHEELS SHALL BE CLEANED PRIOR TO ENTRANCE ONTO PUBLIC RIGHT-OF-WAY.
3. WHEN WASHING IS REQUIRED, IT SHALL BE DONE ON AN AREA STABILIZED WITH CRUSHED STONE THAT DRAINS INTO AN APPROVED SEDIMENT TRAP OR SEDIMENT BASIN.

ROCK CONSTRUCTION ENTRANCE

N.T.S.

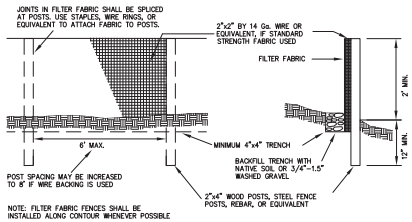

SILT FENCE DETAIL

N.T.S.

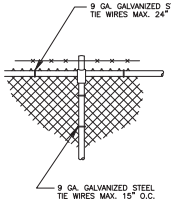

STEEL TIE WIRES

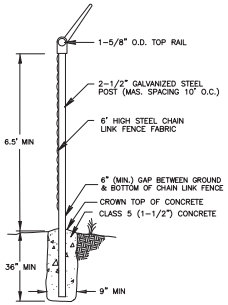

TYPICAL FENCE SECTION

POST AND RAIL SPECIFICATIONS			
POST	PIPE	ROLL FORMED	
	NOM. SIZE (SCH. 40) I.D.	SECTION	WEIGHT (lb/ft)
END, CORNER, OR PULL POST	2 1/2" DIAM.	Y	5.10
LINE OR BRACE POST	2" DIAM.	Z	1.85

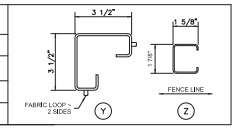

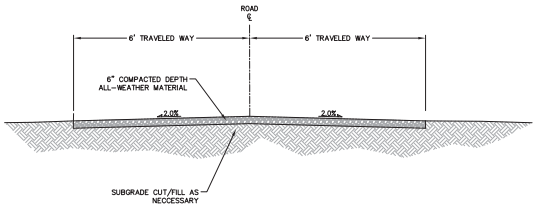

TYPICAL ALL-WEATHER ACCESS ROAD SECTION

N.T.S.

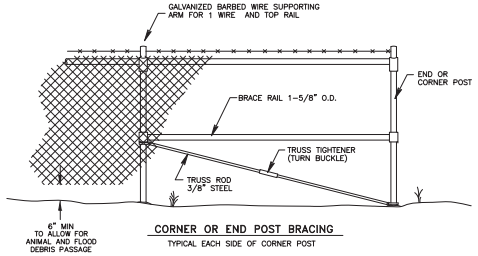

CORNER OR END POST BRACING

TYPICAL EACH SIDE OF CORNER POST

CHAIN LINK FENCE DETAIL

N.T.S.

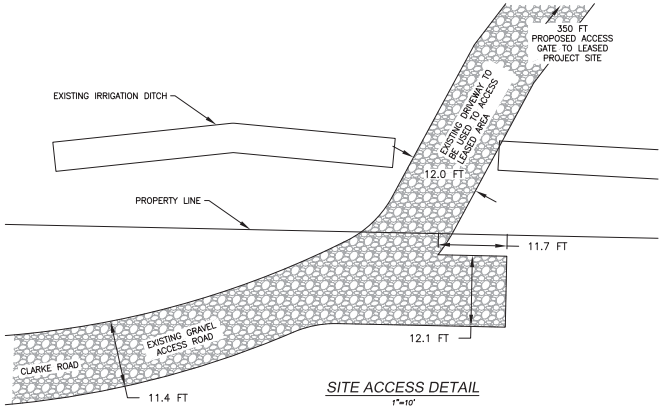

SITE ACCESS DETAIL

1"=10'

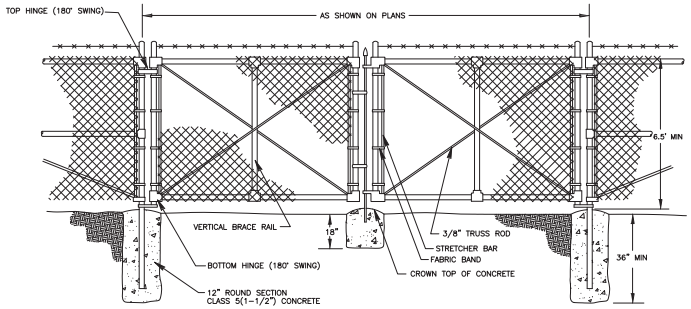

CHAIN LINK FENCE GATE DETAIL

N.T.S.

REVISIONS		
DESCRIPTION	BY	DATE

© THE PLANS SET FORTH ON THIS SHEET ARE AND SHALL REMAIN THE PROPERTY OF ENCOMPASS ENGINEERING & SURVEYING.

TUUSSO ENERGY, LLC

FUMARIA SITE

TESC DETAILS AND STANDARD DETAILS

Encompass
ENGINEERING & SURVEYING
Professional Engineers • Professional Land Surveyors
163 NE Juniper Street, Suite 201 ■ Issaquah, WA 98027 ■ Phone: (425) 392-0250 ■ Fax: (425) 391-3055
Eastern Washington Division
107 Southwest Hall ■ Ch. Ehrn, WA 98926 ■ Phone: (509) 674-7433 ■ Fax: (509) 674-7419

JOB NO.	17016
DATE	Sept. 27 2017
SCALE	AS SHOWN
DESIGNED	SF
DRAWN	SF
CHECKED	TML
APPROVED	TML
SHEET	C2.1

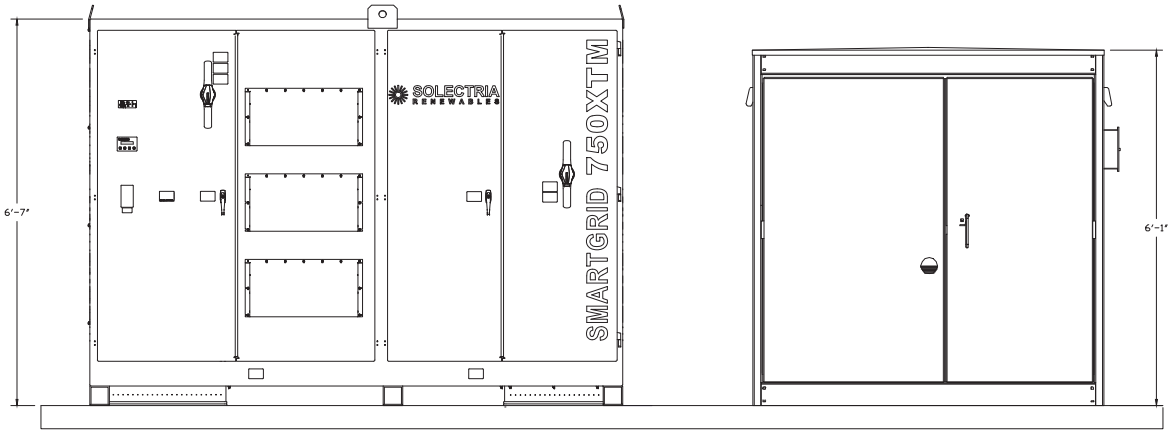

A 1500 kVA BLOCK ELEVATION
SCALE: 1"=1'

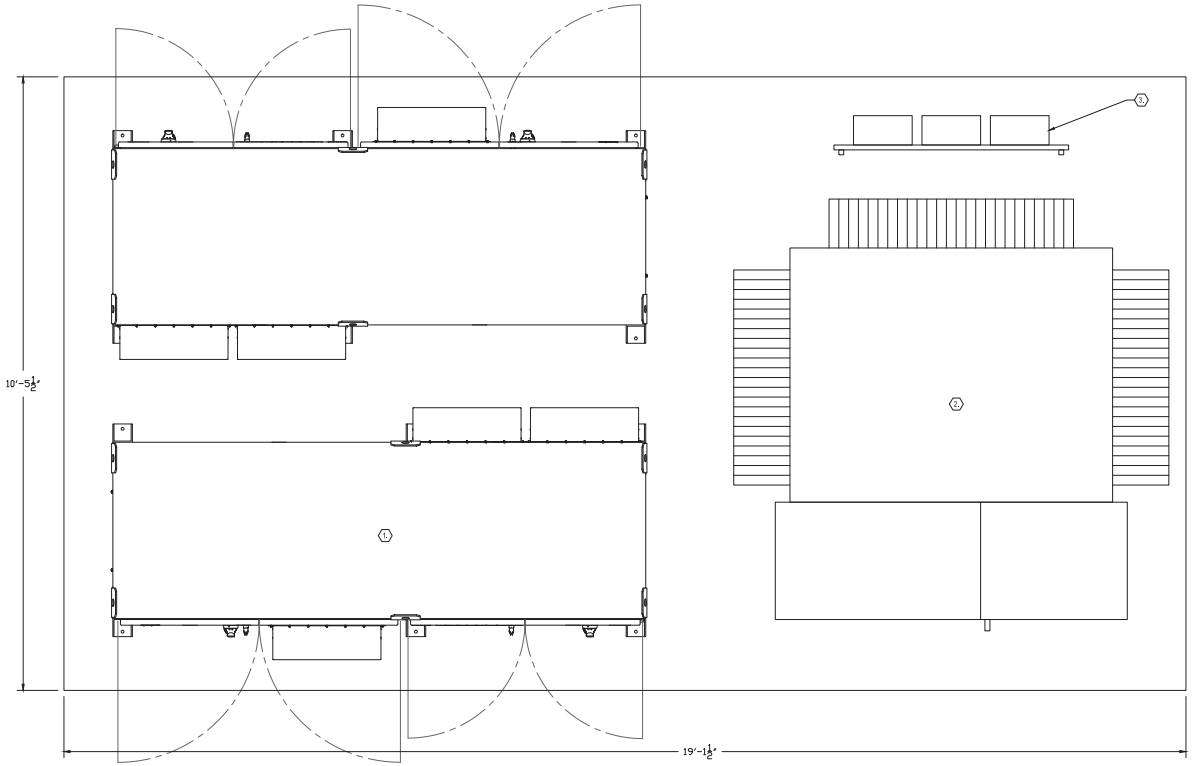

B 1500 kVA BLOCK LAYOUT
SCALE: 1"=1'

THE INFORMATION CONTAINED IN THESE DRAWINGS ARE CONFIDENTIAL AND ARE INTENDED FOR THE DESCRIBED PROJECT ONLY.

NOTES:

1. NONE.

KEYED NOTES:

1. SOLECTRIA SGI 750KVA INVERTER
2. 1500KVA 15KV TRANSFORMER
3. COMMUNICATION RACK

TUUSSO ENERGY

MaxPV ENGINEERING DEVELOPMENT
3131 POLYGON // SACRAMENTO, CA
WWW.MAXPVENGINEERING.COM

REV. NO.	DATE	DESCRIPTION	BY	CHK.	APR.
A	08-09-17	FOR PLAN REVIEW	LB	–	–

OWNER: TUUSSO ENERGY

PROJECT SITE: FUMARIA SOLAR PROJECT

DRAWING: EQUIPMENT PAD DETAILS

DRAWING NO. E-401

THIS PRINT IS NOT TO BE USED FOR CONSTRUCTION UNLESS NOTED AND SIGNED OK FOR CONSTRUCTION ABOVE LAST REVISION.

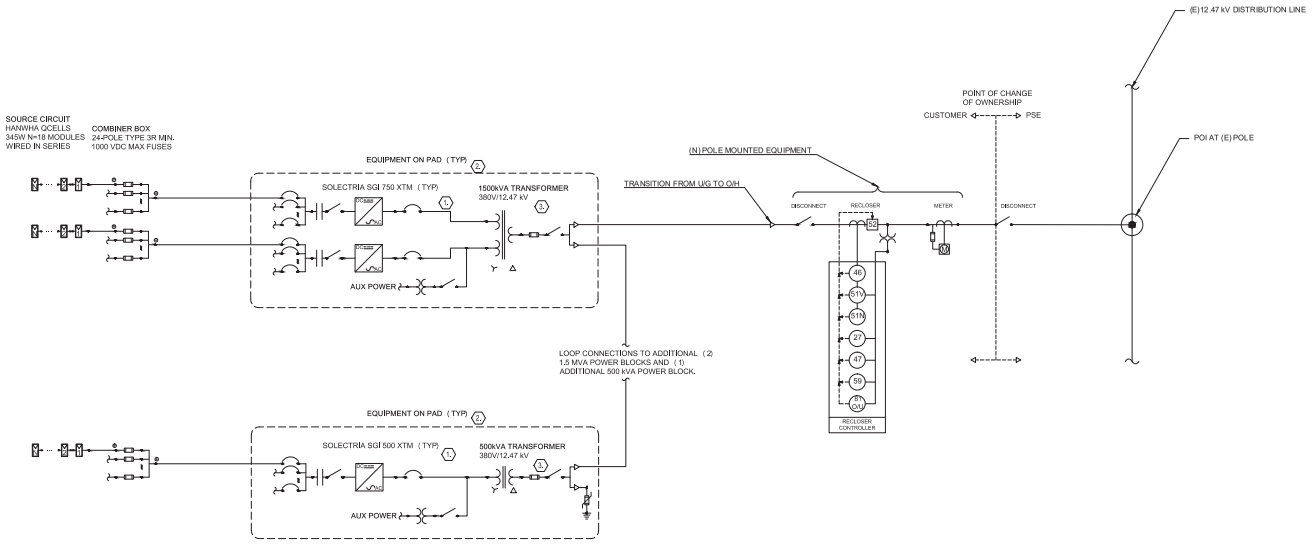

NOTES:

1. NONE.

KEYED NOTES:

1. **PV POWER CONDITIONING SYSTEM:** IEEE 929 AND IEEE 1547 COMPLIANT- 1000VDC MAX INPUT VOLTAGE. INVERTER EQUIPPED WITH INTEGRATED DC CIRCUIT BREAKER COMBINER.
2. EQUIPMENT PAD WITH INVERTER(S), STEP UP TRANSFORMER, AND COMMUNICATION EQUIPMENT.
3. TRANSFORMER SPECIFICATIONS TBD. VERIFY WITH INVERTER MFR & PSE FOR FINAL TRANFORMER CONFIGURATION.

SINGLE-LINE DIAGRAM SYMBOLS

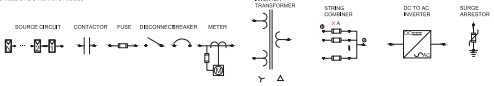

THE INFORMATION CONTAINED IN THESE DRAWINGS ARE CONFIDENTIAL AND ARE INTENDED FOR THE DESCRIBED PROJECT ONLY.

TUUSSO ENERGY

MaxPV ENGINEERING DEVELOPMENT
3231 POLYGON // SACRAMENTO, CA
WWW.MAXPVENGINEERING.COM

REV. NO.	DATE	DESCRIPTION	BY	CHK.	APR.
A	08-09-17	FOR PLAN REVIEW	LB	–	–

OWNER: TUUSSO ENERGY

PROJECT SITE: FUMARIA SOLAR PROJECT

DRAWING: SINGLE LINE DIAGRAM

DRAWING NO. E-601

THIS PRINT IS NOT TO BE USED FOR CONSTRUCTION UNLESS NOTED AND SIGNED OK FOR CONSTRUCTION ABOVE LAST REVISION.

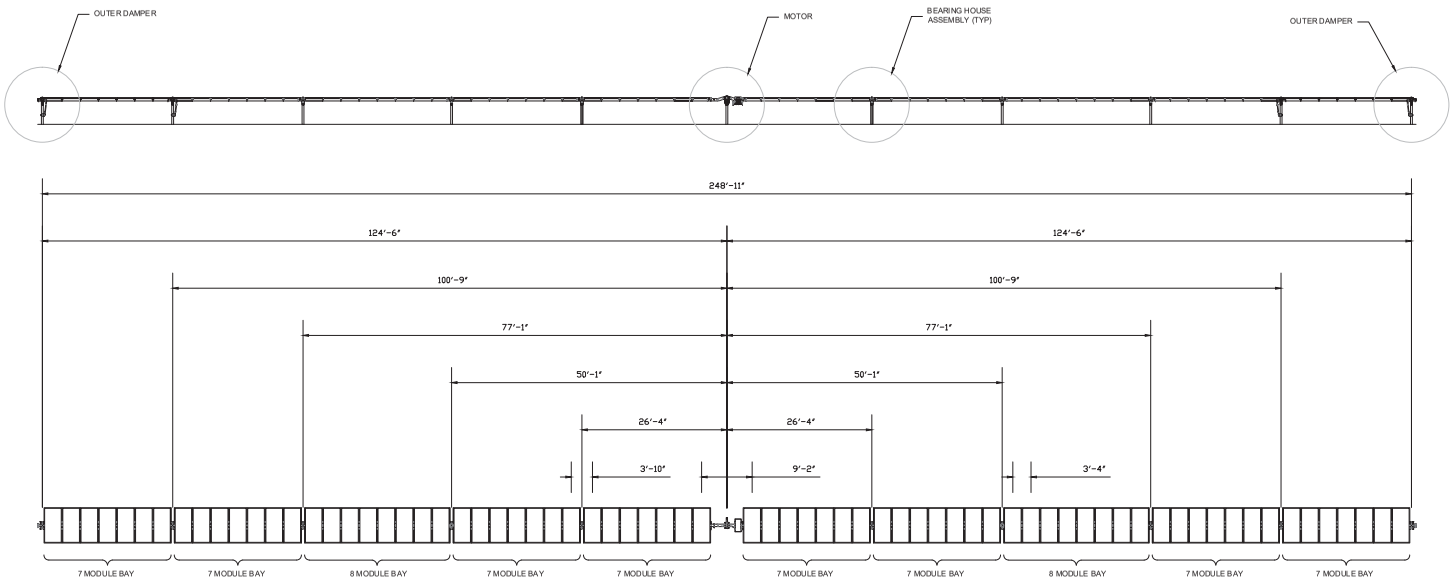

A 72 MODULE TRACKER

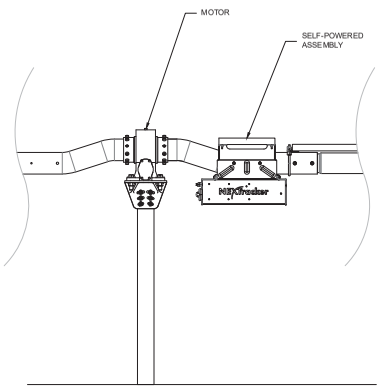

B MOTOR PILE DETAIL

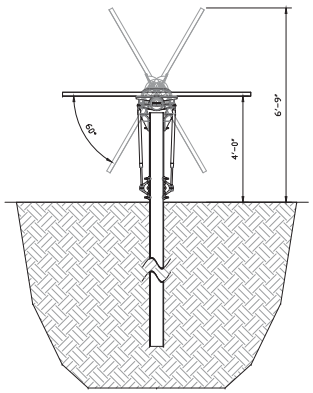

C TRACKER PROFILE

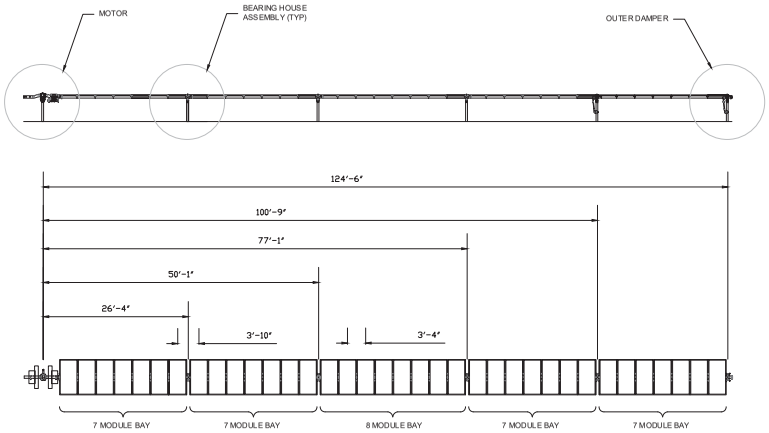

D 36 MODULE TRACKER

NOTES:

1. NONE.

KEYED NOTES:

1. NONE.

TUUSSO ENERGY

MaxPV ENGINEERING DEVELOPMENT
3131 POLYGON // SACRAMENTO, CA
WWW.MAXPVENGINEERING.COM

REV. NO.	DATE	DESCRIPTION	BY	CHK.	APR.
A	08-09-17	FOR PLAN REVIEW	LB	–	–

OWNER: TUUSSO ENERGY

PROJECT SITE: FUMARIA SOLAR PROJECT

DRAWING: TRACKER ELEVATIONS

DRAWING NO. E-701

THIS PRINT IS NOT TO BE USED FOR CONSTRUCTION UNLESS NOTED AND SIGNED OK FOR CONSTRUCTION ABOVE LAST REVISION.

THE INFORMATION CONTAINED IN THESE DRAWINGS ARE CONFIDENTIAL AND ARE INTENDED FOR THE DESCRIBED PROJECT ONLY.

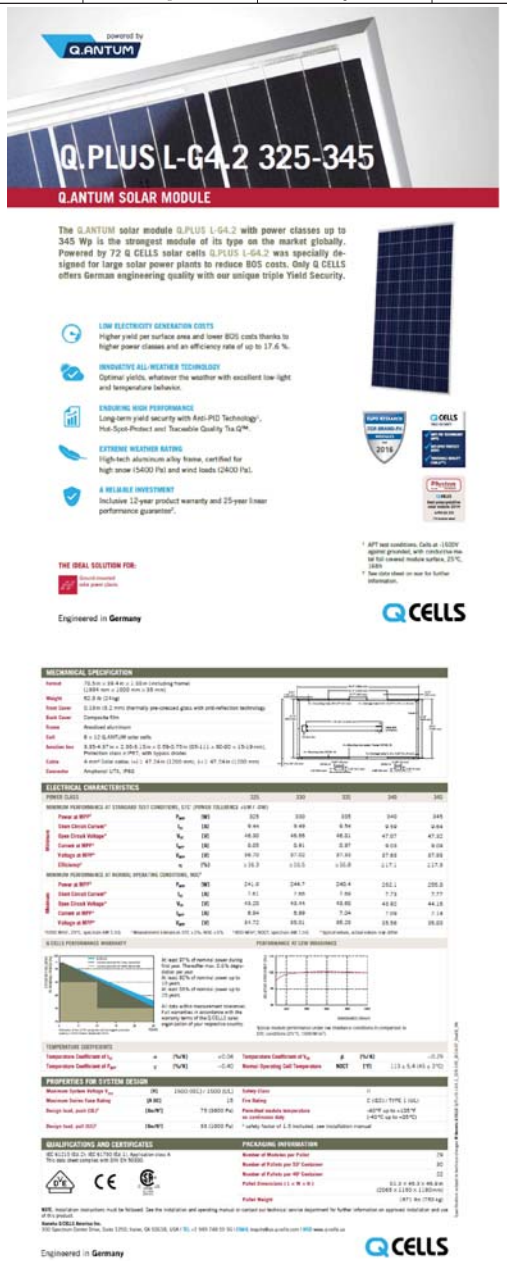

TUUSSO ENERGY

MaxPV ENGINEERING DEVELOPMENT
505 POLVOSO // SACRAMENTO, CA
WWW.MAXPVENGINEERING.COM

REV. NO.	DATE	DESCRIPTION	BY	CHK.	APR.
A	08-09-17	FOR PLAN REVIEW	LB	–	–

OWNER: TUUSSO ENERGY

PROJECT SITE: FUMARIA SOLAR PROJECT

DRAWING: MAJOR EQUIPMENT SPECIFICATIONS

DRAWING NO. E-901

THIS PRINT IS NOT TO BE USED FOR CONSTRUCTION UNLESS NOTED AND SIGNED OK FOR CONSTRUCTION ABOVE LAST REVISION.

THE INFORMATION CONTAINED IN THESE DRAWINGS ARE CONFIDENTIAL AND ARE INTENDED FOR THE DESCRIBED PROJECT ONLY.

TUUSSO ENERGY - PENSTEMON SITE

A PORTION OF THE NE 1/4 OF THE SE 1/4 OF SECTION 17, T. 17 N., R. 19 E., W.M.
KITTATAS COUNTY, STATE OF WASHINGTON

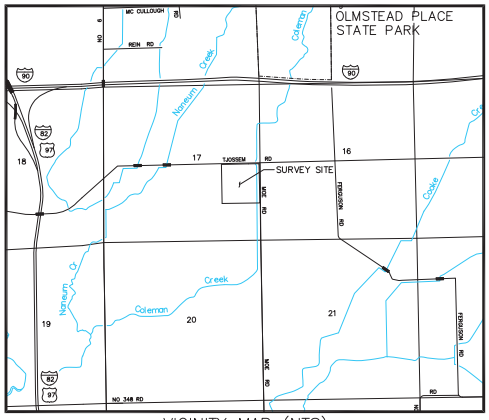

VICINITY MAP (NTS)

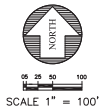

SCALE 1" = 100'

NOTES:

1. ALL CONSTRUCTION TECHNIQUES AND MATERIALS SHALL BE IN ACCORDANCE WITH THE CURRENT STATE OR COUNTY STANDARDS (AS APPLICABLE) AND AS SHOWN IN THESE PLANS.
2. BOUNDARY AND TOPOGRAPHIC SURVEY SHOWN HEREON WAS PREPARED BY ENCOMPASS ENGINEERING AND SURVEYING IN MAY 2017 UNDER DIRECT SUPERVISION OF DUSTIN PIERCE, PLS #45503.

PROPERTY INFORMATION:

APPLICANT:	TUUSSO ENERGY, LLC 500 YALE AVE N. SEATTLE, WA 98109
PARCEL NUMBER:	840233
PARCEL SIZE:	39.38 ACRES
PROPERTY ADDRESS:	TBD, ELLENSBURG, WA 98926
ZONE:	COMMERCIAL AGRICULTURAL
IRRIGATION DISTRICT:	ELLENSBURG WATER

INDEX LOCATION
SEC. 17 T. 17 N.R. 19 E.W.M.

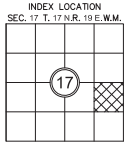

811
Know what's below.
Call before you dig.

SHEET INDEX:

TITLE	NO.
COVER SHEET & OVERALL SITE PLAN	C1.0
NOTES, LEGEND & ABBREVIATIONS	C1.1
TESC. GRADING, AND DRAINAGE PLAN	C2.0
TESC DETAILS AND STANDARD DETAILS	C2.1

REVISIONS		
DESCRIPTION	BY	DATE

© THE PLANS SET FORTH ON THIS SHEET ARE AND SHALL REMAIN THE PROPERTY OF ENCOMPASS ENGINEERING & SURVEYING.

TUUSSO ENERGY, LLC
PENSTEMON SITE
COVER SHEET & OVERALL SITE PLAN

Encompass ENGINEERING & SURVEYING
165 NE Juniper Street, Suite 201 • Issaquah, WA 98027 • Phone: (425) 392-0250 • Fax: (425) 391-3055
Western Washington Division
407 Southeast Blvd. • Cle Elum, WA 98922 • Phone: (509) 674-7433 • Fax: (509) 674-7419
Eastern Washington Division

JOB NO.	17020
DATE	Sept. 27 2017
SCALE	AS SHOWN
DESIGNED	SF
DRAWN	SF
CHECKED	TML
APPROVED	TML
SHEET	C1.0

STANDARD PLAN NOTES:

1. ALL CONSTRUCTION TECHNIQUES AND MATERIALS SHALL BE IN ACCORDANCE WITH THE CURRENT STATE OR COUNTY STANDARDS AND AS SHOWN IN THESE PLANS.
2. A COPY OF THE APPROVED PLANS MUST BE ON SITE WHENEVER CONSTRUCTION IS IN PROGRESS.
3. THE CONTRACTOR SHALL OBTAIN ALL PERMITS REQUIRED FOR WORK THAT ARE NOT PROVIDED BY THE OWNER PRIOR TO START OF CONSTRUCTION.
4. PAVED OR SIMILAR ESTABLISHED SURFACES INCLUDING ROADWAYS, SIDEWALKS AND CURBS THAT ARE TO REMAIN BUT ARE DAMAGED BY NEW CONSTRUCTION SHALL BE REPAIRED AS REQUIRED BY THE INSPECTOR.
5. ALL SURVEYING AND STAKING OF IMPROVEMENTS SHALL BE APPROVED BY THE OWNER. CONTRACTOR SHALL COORDINATE AND VERIFY WITH THE OWNER PRIOR TO OBTAINING STAKING SERVICES.
6. THE CONTRACTOR SHALL NOTIFY THE KITTITAS COUNTY FIRE DISTRICT (509-386-1495) TWENTY-FOUR (24) HOURS IN ADVANCE OF ALL WATER SERVICE INTERRUPTIONS, HYDRANT SHUT-OFFS, AND STREET CLOSURES OR OTHER ACCESS BLOCKAGE. THE CONTRACTOR SHALL ALSO NOTIFY THE DISTRICT OF ALL NEW, RELOCATED, OR ELIMINATED HYDRANTS RESULTING FROM THIS WORK.
7. ALL LOCATIONS OF EXISTING UTILITIES SHOWN HEREON HAVE BEEN ESTABLISHED BY FIELD SURVEY OR OBTAINED FROM AVAILABLE RECORDS AND SHOULD THEREFORE BE CONSIDERED APPROXIMATE ONLY AND NOT NECESSARILY COMPLETE. IT IS THE SOLE RESPONSIBILITY OF THE CONTRACTOR TO INDEPENDENTLY VERIFY THE ACCURACY OF ALL UTILITY LOCATIONS SHOWN AND TO FURTHER DISCOVER AND AVOID ANY OTHER UTILITIES NOT SHOWN HEREON WHICH MAY BE AFFECTED BY THE IMPLEMENTATION OF THIS PLAN.
8. THE CONTRACTOR SHALL LOCATE AND PROTECT ALL ACTIVE CASTINGS AND UTILITIES DURING CONSTRUCTION AND SHALL CONTACT THE UNDERGROUND UTILITIES LOCATOR SERVICE (1-800-424-5555 OR 811) AT LEAST 48 HOURS PRIOR TO CONSTRUCTION.
9. THE CONTRACTOR SHALL ADJUST ALL EXISTING MANHOLE RIMS, DRAINAGE STRUCTURE LIDS, VALVE BOXES AND UTILITY ACCESS STRUCTURES TO FINISH GRADE WITHIN AREAS AFFECTED BY THE PROPOSED IMPROVEMENTS.
10. THE CONTRACTOR SHALL PROVIDE FOR ALL COMPACTION TESTS REQUIRED BY THE INSPECTOR.
11. BACKFILL MATERIAL SHALL MEET STATE OR COUNTY STANDARDS.
12. INSPECTION AND ACCEPTANCE OF ALL WORK WILL BE ACCOMPLISHED BY THE DESIGNATED INSPECTOR. IT SHALL BE THE CONTRACTOR'S RESPONSIBILITY TO COORDINATE AND SCHEDULE APPROPRIATE INSPECTIONS, ALLOWING PROPER ADVANCE NOTICE. THE INSPECTOR MAY REQUIRE RECONSTRUCTION OF ITEMS THAT DO NOT MEET THE CONTRACT DOCUMENTS OR THAT WERE CONSTRUCTED WITHOUT INSPECTION.
13. THE CONTRACTOR SHALL PROVIDE AND MAINTAIN BEST MANAGEMENT PRACTICES AS SHOWN HEREIN TO INSURE THAT SEDIMENT-LADEN WATER DOES NOT ENTER THE WATER OF THE STATE. AS CONSTRUCTION PROGRESSES AND UNEXPECTED (SEASONAL) CONDITIONS DICTATE, ADDITIONAL BEST MANAGEMENT PRACTICES MAY BE REQUIRED. THEREFORE, DURING THE COURSE OF CONSTRUCTION IT SHALL BE THE OBLIGATION AND RESPONSIBILITY OF THE CONTRACTOR TO ADDRESS ANY NEW CONDITIONS THAT MAY BE CREATED BY HIS ACTIVITIES AND TO PROVIDE ADDITIONAL FACILITIES THAT MAY BE NEEDED TO PROTECT ADJACENT PROPERTIES.
14. THE CONTRACTOR SHALL KEEP ALL STREETS AND PUBLIC RIGHT-OF-WAY CLEAN AT ALL TIMES BY SWEEPING.
15. CONTRACTOR SHALL PROVIDE TRAFFIC CONTROL AS NECESSARY THROUGHOUT THE PROJECT. TRAFFIC CONTROL SHALL BE IN ACCORDANCE WITH THE MUTCD, STATE, AND/OR COUNTY STANDARDS.
16. CONTRACTOR SHALL NOT MAKE ANY REVISIONS IN THE FIELD WITHOUT PRIOR WRITTEN APPROVAL BY THE ENGINEER.
17. THE CONTRACTOR SHALL BE RESPONSIBLE FOR PROVIDING ADEQUATE SAFEGUARDS, SAFETY DEVICES, PROTECTIVE EQUIPMENT, FLAGGERS, AND ANY OTHER NEEDED ACTIONS TO PROTECT THE LIFE, HEALTH, AND SAFETY OF THE PUBLIC, AND TO PROTECT PROPERTY IN CONNECTION WITH THE PERFORMANCE OF WORK COVERED BY THE CONTRACTOR. ANY WORK WITHIN THE TRAVELED RIGHT-OF-WAY THAT MAY INTERRUPT NORMAL TRAFFIC FLOW SHALL REQUIRE AT LEAST ONE FLAGGER FOR EACH LANE OF TRAFFIC AFFECTED. ALL SECTIONS OF THE WSDOT STANDARD SPECIFICATIONS 1-07.23 - TRAFFIC CONTROL, SHALL APPLY.
18. ANY TRENCH DEEPER THAN 5 FEET WILL REQUIRE SHORING FOR TRENCH WALL STABILIZATION.

GENERAL TESC NOTES:

1. APPROVAL OF THIS TEMPORARY EROSION AND SEDIMENTATION CONTROL (TESC) PLAN DOES NOT CONSTITUTE AN APPROVAL OF PERMANENT ROAD OR DRAINAGE DESIGN (E.G. SIZE AND LOCATION OF ROADS, PIPES, RESTRICTORS, CHANNELS, RETENTION FACILITIES, UTILITIES, ETC.).
2. THE IMPLEMENTATION OF THESE TESC PLANS AND THE CONSTRUCTION, MAINTENANCE, REPLACEMENT, AND UPGRADING OF THESE TESC FACILITIES IS THE RESPONSIBILITY OF THE APPLICANT OR A TESC SUPERVISOR UNTIL ALL CONSTRUCTION IS APPROVED.
3. THE BOUNDARIES OF THE CLEARING LIMITS SHOWN ON THIS PLAN SHALL BE CLEARLY FLAGGED BY A CONTINUOUS LENGTH OF SURVEY TAPE (OR FENCING, IF REQUIRED) PRIOR TO CONSTRUCTION. DURING THE CONSTRUCTION PERIOD, NO DISTURBANCE BEYOND THE CLEARING LIMITS SHALL BE PERMITTED. THE CLEARING LIMITS SHALL BE MAINTAINED BY THE APPLICANT/TESC SUPERVISOR FOR THE DURATION OF CONSTRUCTION.
4. THE TESC FACILITIES SHOWN ON THIS PLAN MUST BE CONSTRUCTED PRIOR TO OR IN CONJUNCTION WITH ALL CLEARING AND GRADING SO AS TO ENSURE THAT THE TRANSPORT OF SEDIMENT TO SURFACE WATERS, DRAINAGE SYSTEMS, AND ADJACENT PROPERTIES IS MINIMIZED.
5. THE TESC FACILITIES SHOWN ON THIS PLAN ARE THE MINIMUM REQUIREMENTS FOR ANTICIPATED SITE CONDITIONS. DURING THE CONSTRUCTION PERIOD, THESE TESC FACILITIES SHALL BE UPGRADED AS NEEDED FOR UNEXPECTED STORM EVENTS AND MODIFIED TO ACCOUNT FOR CHANGING SITE CONDITIONS (E.G. ADDITIONAL SUMP PUMPS, RELOCATION OF DITCHES AND SILT FENCES, ETC.).
6. ANY AREAS OF EXPOSED SOILS, INCLUDING ROADWAY EMBANKMENTS, THAT WILL NOT BE DISTURBED FOR TEN DAYS DURING THE WET SEASON OR FOURTEEN DAYS DURING THE DRY SEASON SHALL BE IMMEDIATELY STABILIZED WITH THE APPROVED TESC METHODS (E.G., SEEDING, MULCHING, PLASTIC COVERING, ETC.).
7. ANY AREA NEEDING TESC MEASURES, NOT REQUIRING IMMEDIATE ATTENTION, SHALL BE ADDRESSED WITHIN FIFTEEN (15) DAYS.
8. THE TESC FACILITIES ON INACTIVE SITES SHALL BE INSPECTED AND MAINTAINED A MINIMUM OF ONCE A MONTH OR WITHIN 48 HOURS FOLLOWING A STORM EVENT.
9. AT NO TIME SHALL MORE THAN ONE (1) FOOT OF SEDIMENT BE ALLOWED TO ACCUMULATE WITHIN A CATCH BASIN. ALL CATCH BASINS AND CONVEYANCE LINES SHALL BE CLEANED PRIOR TO PAVING. THE CLEANING OPERATION SHALL NOT FLUSH SEDIMENT-LADEN WATER INTO THE DOWNSTREAM SYSTEM.
10. STABILIZED CONSTRUCTION ENTRANCES AND ROADS SHALL BE INSTALLED AT THE BEGINNING OF CONSTRUCTION AND MAINTAINED FOR THE DURATION OF THE PROJECT. ADDITIONAL MEASURES, SUCH AS WASH PADS, MAY BE REQUIRED TO ENSURE THAT ALL PAVED AREAS ARE KEPT CLEAN FOR THE DURATION OF THE PROJECT.
11. ANY PERMANENT RETENTION/DETENTION FACILITY USED AS A TEMPORARY SETTLING BASIN SHALL BE MODIFIED WITH THE NECESSARY EROSION CONTROL MEASURES AND SHALL PROVIDE ADEQUATE STORAGE CAPACITY. IF THE PERMANENT FACILITY IS TO FUNCTION ULTIMATELY AS AN INFILTRATION SYSTEM, THE TEMPORARY FACILITY MUST BE GRADED SO THAT THE BOTTOM AND SIDES ARE AT LEAST ONE FOOT ABOVE THE FINAL GRADE OF THE PERMANENT FACILITY.
12. WHERE STRAW MULCH FOR TEMPORARY EROSION CONTROL IS REQUIRED, IT SHALL BE APPLIED AT A MINIMUM THICKNESS OF TWO INCHES

STANDARD GRADING NOTES:

1. ALL GRADING ACTIVITIES, INCLUDING EXCAVATION, BACKFILL AND COMPACTION, SHALL BE DONE IN ACCORDANCE WITH STATE OR COUNTY STANDARDS AS APPLICABLE.
2. WITHIN ANY AREAS TO RECEIVE STRUCTURAL FILL, PAVEMENTS OR HARDSCAPE, THE SUBGRADE SHALL BE SCARIFIED, MOISTURE CONDITIONED, AND COMPACTED TO AT LEAST 95% MAXIMUM DENSITY (ASTM D 1557).
3. CONTRACTOR SHALL OBTAIN AN APPROVAL BY THE GEOTECHNICAL ENGINEER PRIOR TO PROCEEDING WITH ANY OVEREXCAVATION. CONTRACTOR SHALL VERIFY THE AMOUNT OF OVEREXCAVATION WITH GEOTECHNICAL ENGINEER.
4. COMPACTION SHALL BE DONE PER STATE OR COUNTY STANDARDS AS APPLICABLE. SITE EXCAVATION AND/OR SUBGRADE PREPARATION SHALL BE COMPLETED BEFORE PLACING STRUCTURAL FILL. COMPACTION SHALL BE VERIFIED BY DENSITY TESTING.
5. ALL TEMPORARY CUT SLOPES SHALL NOT EXCEED 1.5H:1V. ALL PERMANENT CUT SLOPES SHALL NOT EXCEED 2H:1V OR AS SHOWN ON PLANS. ALL PERMANENT FILL SLOPES SHALL NOT EXCEED 2H:1V.
6. CONTRACTOR SHALL IMPLEMENT APPROPRIATE PROTECTION AND TRAFFIC CONTROL DURING CONSTRUCTION TO DIRECT TRUCK TRAFFIC.
7. ANY AND ALL FILL MATERIAL PLACED ON THE LOT SHALL BE COMPACTED AND A COMPACTION INSPECTION REPORT FOR THE COMPACTION AND BEARING CAPACITY OF THAT FILL MATERIAL SHALL BE PROVIDED TO THE STATE OR COUNTY AS APPLICABLE WITHIN 60 DAYS OF THE PLACEMENT OF THE FILL MATERIAL.
8. ALL EXCESS SOIL SHALL BE OFF-HAULED TO A LEGAL DISPOSAL SITE. NO EXCESS SOIL SHALL BE SPREAD ON THE SITE WITHOUT CLEARLY BEING SHOWN ON THE APPROVED GRADING PLAN.
9. ALL CUT AND FILL SLOPES AND ALL EXPOSED DIRT SHALL BE PLANTED, WATERED AND MAINTAINED UNTIL EFFECTIVE EROSION CONTROL HAS BEEN ESTABLISHED TO THE SATISFACTION OF THE STATE OR COUNTY AS APPLICABLE.
10. CONTRACTOR SHALL PROVIDE HIS/HER OWN EARTHWORK CALCULATIONS FOR ALL CUT AND FILL OPERATIONS.

ABBREVIATIONS:

AC - ASPHALT CONCRETE
ACP - ABESTOS CEMENT PIPE
ADD'L - ADDITIONAL
AD - AREA DRAIN
ADJ - ADJACENT
ANSI - AMERCIAN NATIONAL STANDARDS INSTITUTE
ALT - ALTERNATE
ALUM - ALUMINUM
APPROX - APPROXIMATE(LY)
ARCH - ARCHITECT(URAL)
AP - ANGLE POINT
ASPH - ASPHALT
ASSY - ASSEMBLY
ASTM - AMERICAN SOCIETY OF TESTING AND MATERIALS
AVE - AVENUE
BC - BACK OF CURB
BF - BLIND FLANGE
BLDG - BUILDING
BLDG - BUILDING CORNER
BLK - BLOCK
BLVD - BOULEVARD
BM - BENCHMARK
BNDY - BOUNDARY
BO - BLOW OFF
BOW - BOTTOM OF WALL (AT FINISHED GRADE)
BSBL - BUILDING SETBACK LINE
BVC - BEGINNING OF VERTICAL CURVE
BVCE - BEGIN VERTICAL CURVE ELEVATION
BVCS - BEGIN VERTICAL CURVE STATION
BW - BACK OF WALK
CB - CATCH BASIN
CF - CUBIC FEET (FOOT)
CIP - CAST IRON PIPE
CJ - CONSTRUCTION JOINT
CL - CLASS
C/L - CENTER LINE
CLR - CLEARENCE
CMP - CORRUGATED METAL PIPE
CO - CLEAN OUT
CONN - CONNECTION
CONT - CONTINUOUS (CONTINUED)
CONTR - CONTRACTOR
C, CONC - CONCRETE
CONST - CONSTRUCTION
CP - CONTROL POINT
CFS - CUBIC FEET PER SECOND
CTR - CENTER(ED)
CTV - CABLE TV
C&G - CURB AND GUTTER
CY - CUBIC YARD
DCVA - DOUBLE CHECK VALVE ASSEMBLY
DDCV - DOUBLE DETECTOR CHECK VALVE
DEPT. - DEPARTMENT
DET - DETAIL OR DETENTION
DIP - DUCTLE IRON PIPE
DIA(S) - DIAMETER
DIM - DIMENSION
DOT - DEPARTMENT OF TRANSPORTATION
DS - DOWN SPOUT
DWG - DRAWING
E - EAST(ING)
EA - EACH
EL - ELEVATION
ELEC - ELECTRICAL
EP - EDGE OF PAVEMENT
EQUIV - EQUIVALENT
EVC - END OF VERTICAL CURVE
EVCE - END OF VERTICAL CURVE ELEVATION
EVCS - END OF VERTICAL CURVE STATION
EX, EXIST - EXISTING
FC - FACE OF CURB
FD - FLOOR DRAIN
FDC - FIRE DEPARTMENT CONNECTION
FFE - FINISH FLOOR ELEVATION
FH - FIRE HYDRANT
FL - FLANGED OR FLOW LINE
FLR - FLOOR
FS - FINSHED SURFACE
FT (') - FOOT (FEET)
FTG - FOOTING
G - GAS MAIN
GA - GAUGE
GALV - GALVANIZED
GB - GRADE BREAK
GM- GAS METER
GRD - GRADE
HB - HOSE BIBB
HDPE - HIGH DENSITY POLYETHYLENE
HORIZ (H) - HORIZONTAL
HT - HEIGHT
HYD - HYDRANT
ID - INSIDE DIAMETER
E - INVERT ELEVATION
IN (") - INCHES
INV - INVERT
IRR - IRRIGATION WATER
L - LENGTH
LB, # - POUND(S)
LF - LINEAR FEET
LN - LANE
MAT'L - MATERIAL
MAX - MAXIMUN
MFR - MANUFACTURER
MH - MANHOLE
MIN - MINIMUM
MISC - MISCELLANEOUS
MJ - MECHANICAL JOINT
N - NORTH(ING)
NO (#) - NUMBER
N.T.S. - NOT TO SCALE
O.C. - ON CENTER
O.D. - OUTSIDE DIAMETER
O/W - OIL WATER
P - POWER
PC - POINT OF CURVATURE
PERF - PERFORATED
PI - POINT OF INTERSECTION
PIV - POST INDICTOR VALVE
PL - PROPERTY LINE
PP - POWER POLE
PROV - PROVIDED
PSF - POUNDS PER SQUARE FOOT
PSI - POINDS PER SQUARE INCH
PT - POINT OF TANGENCY
PVC - POLYVINYL CHLORIDE
PVI - POINT OF VERTICAL INTERSECTION
PVMT - PAVEMENT
PVT - POINT OF VERTICAL TANGENT
QTY - QUANTITY
RAD (R) - RADIUS
RCP - REINFORCED CONCRETE PIPE
RD - ROAD
REF - REFERENCE
REINF - REINFORCED
REQ - REQUIRED
RET - RETAINING
ROW - RIGHT-OF-WAY
RR - RAILROAD
S - SOUTH
S, SL - SLOPE
SCH - SCHEDULE
SD - STORM DRAIN
SF - SQUARE FOOT
SHT - SHEET
SIM - SIMILAR
SPEC - SPECIFICATION(S)
SQ - SQUARE
SS - SANITARY SEWER
ST - STREET
STA - STATION
STD - STANDARD
STL - STEEL
T - TELEPHONE WIRE
TBM - TEMPORARY BENCH MARK
TC - TOP OF CURB
TEMP - TEMPORARY
TG/RIM - TOP OF GRATE/RIM
THRU - THROUGH
TOE - TOE OF WALL OR SLOPE
TOP - TOP OF WALL OR SLOPE
TOW - TOP OF WALL
TYP - TYPICAL
VC - VERTICAL CURVE
VOL - VOLUME
W - WEST
W/ - WITH
WM - WATER METER
W/O - WITHOUT
WQ - WATER QUALITY
WT - WEIGHT
WWF - WELDED WIRE FABRIC
WV - WATER VALVE
YD - YARD DRAIN

LEGEND

	EXISTING:	PROPOSED:
BOUNDARY LINE/RIGHT-OF-WAY		
LOT LINE		
STREET MONUMENT (IN CONCRETE)		
PROPERTY CORNER		
BENCHMARK/CONTROL POINT		
TEMPORARY BENCHMARK	TBM	TBM
EASEMENT LINE		
CENTERLINE		
CURB/GUTTER/SIDEWALK LINE		
EDGE OF PAVEMENT LINE		
CHAIN LINK FENCE LINE		
SIGN		
STREET LIGHT (ELECTROLIER)		
GRADE BREAK LINE		
CONTOUR LINE (MAJOR)	1650	1650
CONTOUR LINE (MINOR)	1651	1651
CATCH BASIN (TYPE 1)		
STORM DRAIN MANHOLE/CATCH BASIN TYPE 2		
STORM DRAIN LINE	SD	
CONTROL STRUCTURE		
RIP-RAP PAD		
SANITARY SEWER LINE	SS	
SANITARY SEWER CLEANOUT		
SANITARY SEWER MANHOLE		
WATERMAIN LINE	W	
GATE VALVE (MECHANICAL JOINT)		
GATE VALVE (FLANGE)		
WATER METER		
FIRE HYDRANT		
CAP		
GAS LINE	G	G
GAS VALVE		
UNDERGROUND ELECTRIC LINE	E	E
POWER POLE / UTILITY POLE		
GUY ANCHOR		
ELECTRICAL TRANSFORMER / VAULT	P	P
TELEPHONE VAULT/PEDESTAL	T	T
TELEPHONE MANHOLE	T	T
100 YR FLOODPLAIN HATCH		
CONCRETE HATCH		
GRAVEL HATCH		
ALL WEATHER ROAD HATCH (COMPACTED SOIL OR GRAVEL)		
PROPOSED LANDSCAPING STRIP		

CONTRACTOR RESPONSIBILITY:

CONTRACTOR AGREES THAT HE SHALL ASSUME SOLE AND COMPLETE RESPONSIBILITY FOR JOB SITE CONDITIONS, INCLUDING THE SAFETY OF ALL PERSONS AND PROPERTY, DURING THE COURSE OF CONSTRUCTION OF THIS PROJECT, AND THAT THIS REQUIREMENT SHALL APPLY CONTINUOUSLY AND NOT BE LIMITED TO NORMAL WORKING HOURS. THE CONTRACTOR SHALL DEFEND, INDEMNIFY AND HOLD THE OWNER AND THE ENGINEER HARMLESS FROM ANY AND ALL LIABILITY, REAL OR ALLEGED, IN CONNECTION WITH THE PERFORMANCE OF WORK ON THIS PROJECT, EXCEPTING FOR LIABILITY ARISING FROM THE SOLE NEGLIGENCE OF THE OWNER OR THE ENGINEER.

DISCREPANCIES:

IF THERE ARE ANY DISCREPANCIES BETWEEN DIMENSIONS IN DRAWINGS AND EXISTING CONDITIONS WHICH WILL AFFECT THE WORK, THE CONTRACTOR SHALL BRING SUCH DISCREPANCIES TO THE ATTENTION OF THE ENGINEER FOR ADJUSTMENT BEFORE PROCEEDING WITH THE WORK. THE CONTRACTOR SHALL BE RESPONSIBLE FOR THE PROPER FITTING OF ALL WORK AND FOR THE COORDINATION OF ALL TRADES, SUBCONTRACTORS, AND PERSONS ENGAGED UPON THIS CONTRACT.

REVISIONS		
DESCRIPTION	BY	DATE

© THE PLANS SET FORTH ON THIS SHEET ARE AND SHALL REMAIN THE PROPERTY OF ENCOMPASS ENGINEERING & SURVEYING.

TIMOTHY MICHOULIS HOWARD
STATE OF WASHINGTON
48985
REGISTERED
PROFESSIONAL ENGINEER

TUUSSO ENERGY, LLC
PENSTEMON SITE
NOTES, LEGEND & ABBREVIATIONS

Encompass
ENGINEERING & SURVEYING
165 NE Juniper Street, Suite 201 • Issaquah, WA 98027 • (425) 392-0250 • Fax: (425) 391-3055
Western Washington Division
407 Southeast Blvd. • Cle Elum, WA 98922 • Phone: (509) 674-7433 • Fax: (509) 674-7419
Eastern Washington Division

JOB NO.	17020
DATE	Sept. 27 2017
SCALE	AS SHOWN
DESIGNED	SF
DRAWN	SF
CHECKED	TML
APPROVED	TML
SHEET	C1.1

TUUSSO ENERGY - PENSTEMON SITE

A PORTION OF THE NE 1/4 OF THE SE 1/4 OF SECTION 17, T. 17 N., R. 19 E., W.M.
KITTATAS COUNTY, STATE OF WASHINGTON

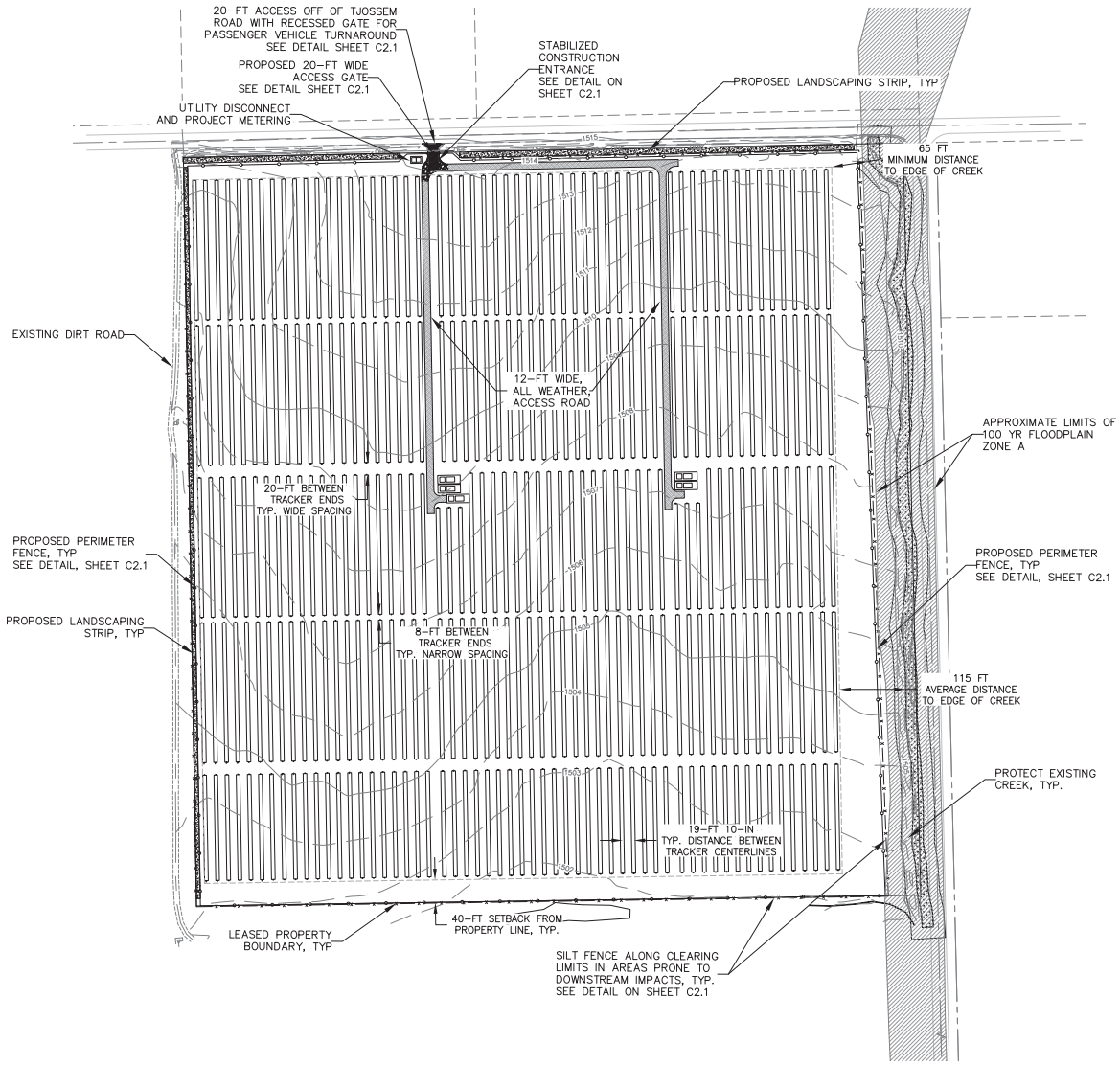

SHEET NOTES:

1. REFER TO STANDARD PLAN NOTES ON SHEET C1.1.
2. ALL CONSTRUCTION SHALL BE IN ACCORDANCE WITH STATE OR COUNTY STANDARDS AS APPLICABLE. IT SHALL BE THE SOLE RESPONSIBILITY OF THE APPLICANT AND THE PROFESSIONAL CIVIL ENGINEER TO CORRECT ANY ERROR, OMISSION, OR VARIATION FROM THE ABOVE REQUIREMENTS FOUND IN THESE PLANS.
3. THE CONTRACTOR SHALL BE RESPONSIBLE FOR PROVIDING ADEQUATE SAFEGUARDS, SAFETY DEVICES, PROTECTIVE EQUIPMENT, FLAGGERS, AND ANY OTHER NEEDED ACTIONS TO PROTECT THE LIFE, HEALTH, AND SAFETY OF THE PUBLIC; AND TO PROTECT PROPERTY IN CONNECTION WITH THE PERFORMANCE OF WORK COVERED BY THE CONTRACTOR. ANY WORK WITHIN THE TRAVELED RIGHT-OF-WAY THAT MAY INTERRUPT NORMAL TRAFFIC FLOW SHALL REQUIRE AT LEAST ONE FLAGGER FOR EACH LANE OF TRAFFIC AFFECTED. ALL SECTIONS OF THE WSDOT STANDARD SPECIFICATIONS 1-07.23 – TRAFFIC CONTROL, SHALL APPLY.
4. ANY TRENCH DEEPER THAN 5 FEET WILL REQUIRE SHORING FOR TRENCH WALL STABILIZATION.

TESC NOTES:

1. SILT FENCE TO BE INSTALLED AS STAND-ALONE UNLESS RUNNING ALONG EXIST. FENCE.
2. CONTRACTOR'S STAGING AREA AND STOCKPILE AREAS SHALL BE DETERMINED PRIOR TO START OF CONSTRUCTION.

RECOMMENDED CONSTRUCTION SEQUENCE:

(1) PRE-CONSTRUCTION MEETING.
(2) GRADE AND INSTALL CONSTRUCTION ENTRANCE(S).
(3) INSTALL PERIMETER PROTECTION (SILT FENCE, BRUSH BARRIER, ETC.).
(4) GRADE AND STABILIZE CONSTRUCTION ROADS.
(5) INSTALL WIDE FLANGE STEEL PILES.
(6) INSTALL ELECTRICAL UNDERGROUND AND MECHANICAL TRACKERS
(7) INSTALL PANELS
(8) PERFORM ANY REQUIRED SITE RESTORATION

LEGEND

INVERTER STATION	
72 MODULE TRACKER	
54 MODULE TRACKER	
36 MODULE TRACKER	

SYSTEM SUMMARY	
kWDC	6,588.8
kVAAC	5,000.0
INVERTER QTY.	5
MODULE QTY.	19,098
DC SYSTEM VOLTAGE (V)	1000
DC SYSTEM VOLTAGE (kV)	12.47
INVERTER AC RATING (KVA)	1000
PV MODULE MODEL #	QCELLS 345W
PV MODULE NAMEPLATE (W)	345
RACKING SYSTEM	NEXTRACKER
GROUND COVERATE RATIO	0.33
DC:AC RATIO	1.32
MODULE TILT	TRACKER, +/-60°

TESC LEGEND:

SILT FENCE – SEE DETAIL ON SHEET C2.1

CONSTRUCTION ENTRANCE – SEE DETAIL ON SHEET C2.1

REVISIONS		
DESCRIPTION	BY	DATE

© THE PLANS SET FORTH ON THIS SHEET ARE AND SHALL REMAIN THE PROPERTY OF ENCOMPASS ENGINEERING & SURVEYING.

TUSSO ENERGY, LLC
PENSTEMON SITE
TESC, GRADING, AND DRAINAGE PLAN

Encompass ENGINEERING & SURVEYING
Western Washington Division
165 NE Juniper Street, Suite 201 • Issaquah, WA 98027 • Phone: (425) 392-0250 • Fax: (425) 391-3055
Eastern Washington Division
407 Southwater Blvd. • Cle Elum, WA 98922 • Phone: (509) 674-7433 • Fax: (509) 674-7419

JOB NO.	17020
DATE	Sept. 27 2017
SCALE	AS SHOWN
DESIGNED	SF
DRAWN	SF
CHECKED	TML
APPROVED	TML
SHEET	C2.0

TUUSSO ENERGY - PENSTEMON SITE

A PORTION OF THE NE 1/4 OF THE SE 1/4 OF SECTION 17, T. 17 N., R. 19 E., W.M.
KITTATAS COUNTY, STATE OF WASHINGTON

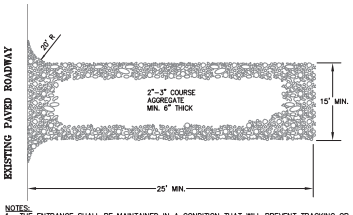

NOTES:
1. THE ENTRANCE SHALL BE MAINTAINED IN A CONDITION THAT WILL PREVENT TRACKING OR FLOWING OF SEDIMENT ONTO PUBLIC RIGHTS-OF-WAY. THIS MAY REQUIRE TOP DRESSING, REPAIR AND/OR CLEANOUT OF ANY MEASURES USED TO TRAP SEDIMENT.
2. WHEN NECESSARY, WHEELS SHALL BE CLEANED PRIOR TO ENTRANCE ONTO PUBLIC RIGHT-OF-WAY.
3. WHEN WASHING IS REQUIRED, IT SHALL BE DONE ON AN AREA STABILIZED WITH CRUSHED STONE THAT DRAINS INTO AN APPROVED SEDIMENT TRAP OR SEDIMENT BASIN.

ROCK CONSTRUCTION ENTRANCE

N.T.S.

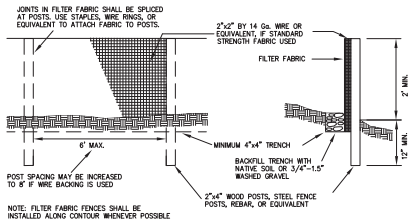

SILT FENCE DETAIL

N.T.S.

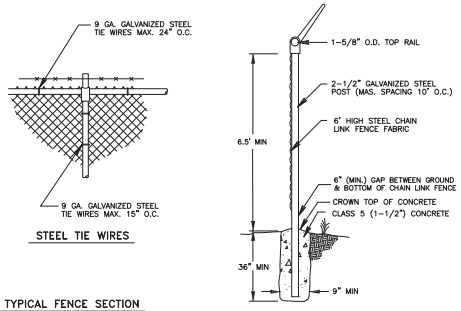

TYPICAL FENCE SECTION

POST AND RAIL SPECIFICATIONS			
POST	PIPE	ROLL FORMED	
	NOM. SIZE (SCH. 40) I.D.	SECTION	WEIGHT (lb/ft)
END, CORNER, OR PULL POST	2 1/2" DIAM.	Y	5.10
LINE OR BRACE POST	2" DIAM.	Z	1.85

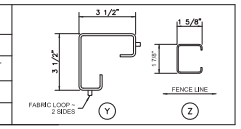

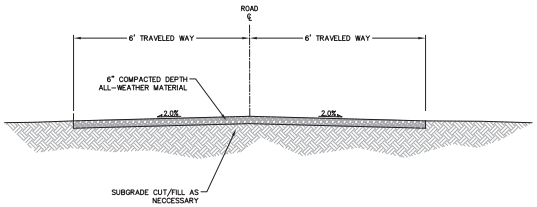

TYPICAL ALL-WEATHER ACCESS ROAD SECTION

N.T.S.

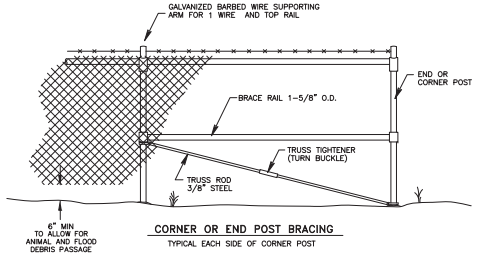

CORNER OR END POST BRACING

TYPICAL EACH SIDE OF CORNER POST

CHAIN LINK FENCE DETAIL

N.T.S.

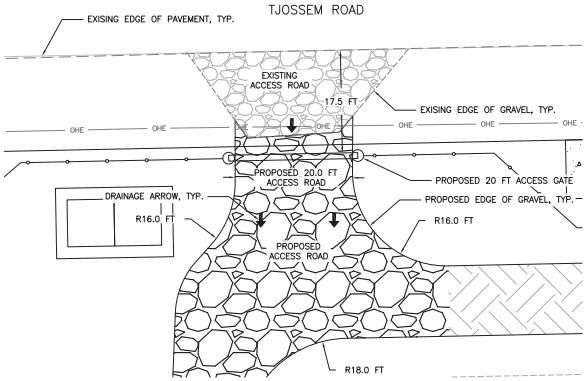

SITE ACCESS DETAIL

1"=10'

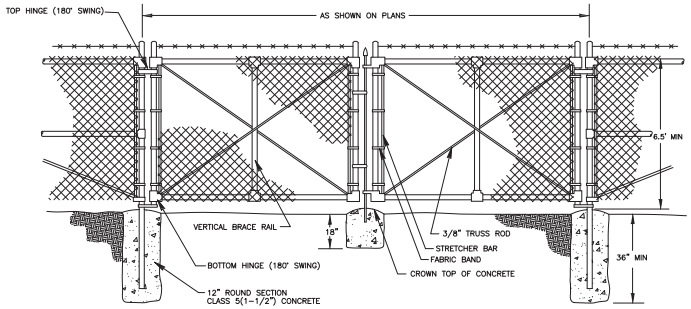

CHAIN LINK FENCE GATE DETAIL

N.T.S.

REVISIONS		
DESCRIPTION	BY	DATE

© THE PLANS SET FORTH ON THIS SHEET ARE AND SHALL REMAIN THE PROPERTY OF ENCOMPASS ENGINEERING & SURVEYING.

TUUSSO ENERGY, LLC
PENSTEMON SITE
TESC DETAILS AND STANDARD DETAILS

Encompass ENGINEERING & SURVEYING
Western Washington Division
165 NE Juniper Street, Suite 201 • Issaquah, WA 98027 • Phone: (425) 392-0250 • Fax: (425) 391-3055
Eastern Washington Division
407 Southeast Blvd. • Cle Elum, WA 98922 • Phone: (509) 674-7433 • Fax: (509) 674-7419

JOB NO.	17020
DATE	Sept. 27 2017
SCALE	AS SHOWN
DESIGNED	SF
DRAWN	SF
CHECKED	TML
APPROVED	TML
SHEET	C2.1

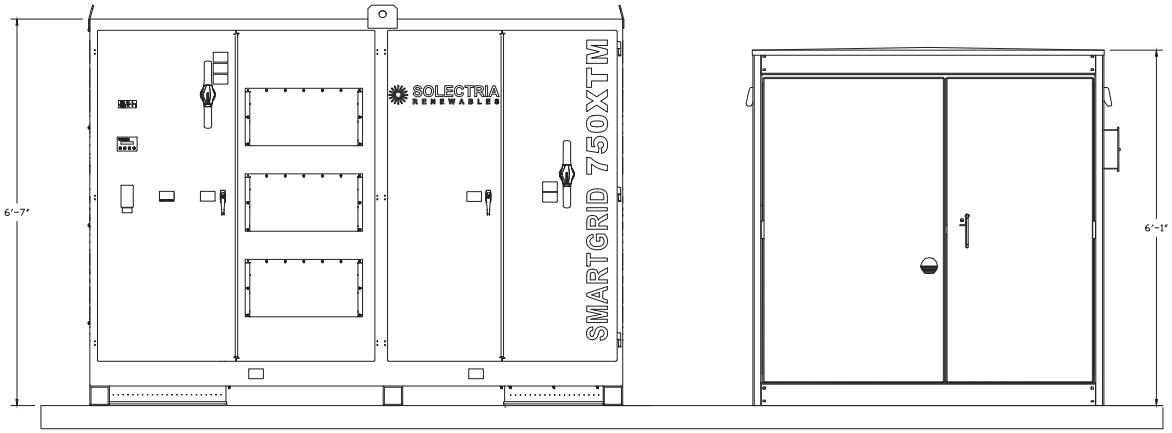

A 1500 kVA BLOCK ELEVATION
SCALE: 1"=1'

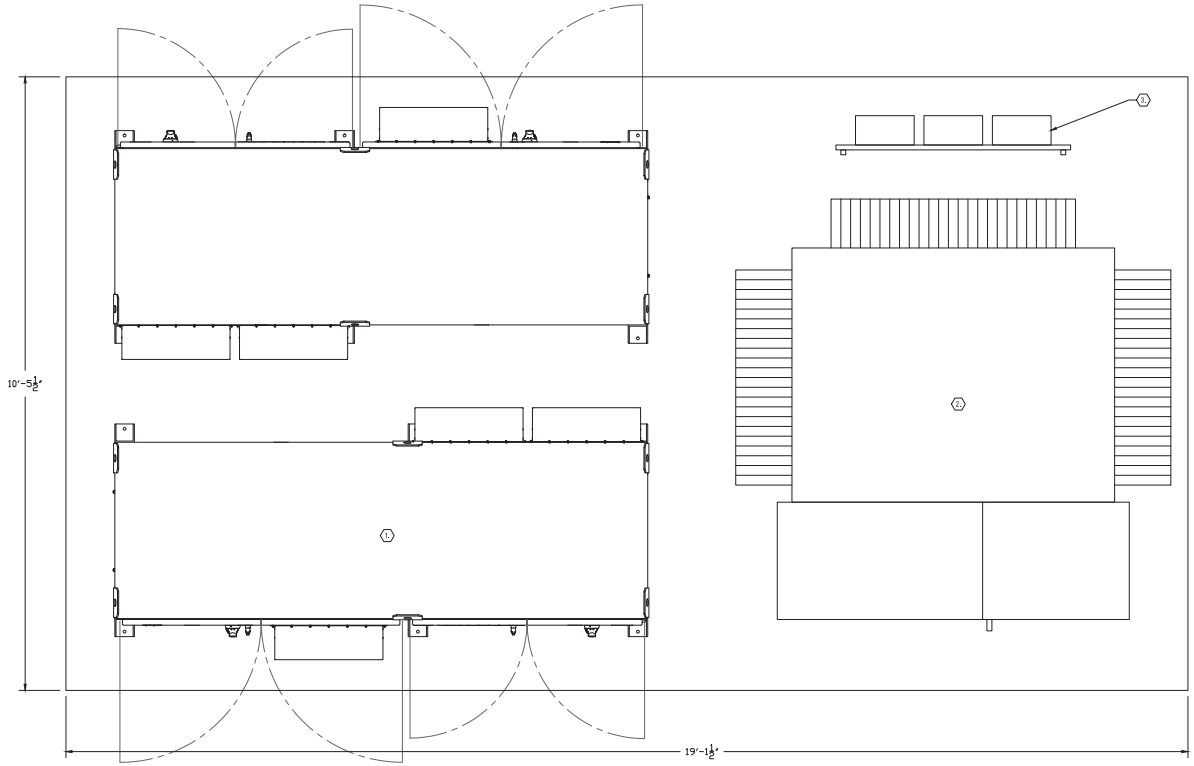

B 1500 kVA BLOCK LAYOUT
SCALE: 1"=1'

THE INFORMATION CONTAINED IN THESE DRAWINGS ARE CONFIDENTIAL AND ARE INTENDED FOR THE DESCRIBED PROJECT ONLY.

NOTES:

1. NONE.

KEYED NOTES:

1. SOLECTRIA SGI 750KVA INVERTER
2. 1500KVA 15KV TRANSFORMER
3. COMMUNICATION RACK

TUUSSO ENERGY

MaxPV ENGINEERING DEVELOPMENT
3131 POLYGON // SACRAMENTO, CA
WWW.MAXPVENGINEERING.COM

REV. NO.	DATE	DESCRIPTION	BY	CHK.	APR.
A	08-09-17	FOR PLAN REVIEW	LB	–	–

OWNER: TUUSSO ENERGY

PROJECT SITE: PENSTEMON SOLAR PROJECT

DRAWING: EQUIPMENT PAD DETAILS

DRAWING NO. E-401

THIS PRINT IS NOT TO BE USED FOR CONSTRUCTION UNLESS NOTED AND SIGNED OK FOR CONSTRUCTION ABOVE LAST REVISION.

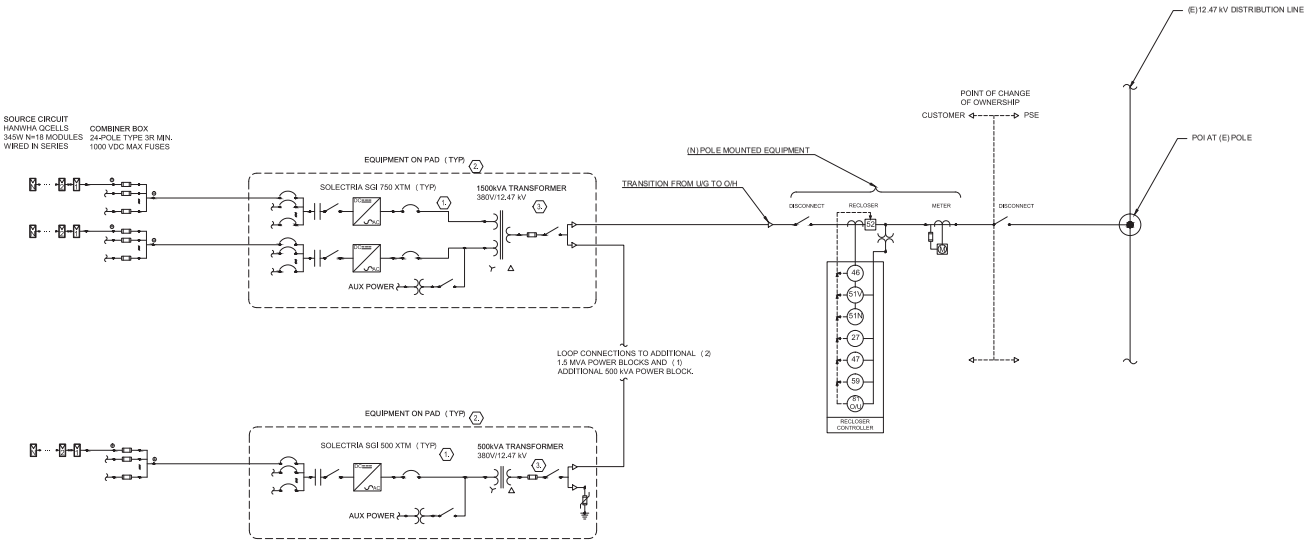

NOTES:

1. NONE.

KEYED NOTES:

1. **PV POWER CONDITIONING SYSTEM:** IEEE 929 AND IEEE 1547 COMPLIANT- 1000VDC MAX INPUT VOLTAGE. INVERTER EQUIPPED WITH INTEGRATED DC CIRCUIT BREAKER COMBINER.
2. EQUIPMENT PAD WITH INVERTER(S), STEP UP TRANSFORMER, AND COMMUNICATION EQUIPMENT.
3. TRANSFORMER SPECIFICATIONS TBD. VERIFY WITH INVERTER MFR & PSE FOR FINAL TRANFORMER CONFIGURATION.

SINGLE-LINE DIAGRAM SYMBOLS

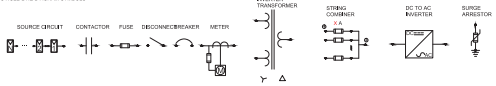

THE INFORMATION CONTAINED IN THESE DRAWINGS ARE CONFIDENTIAL AND ARE INTENDED FOR THE DESCRIBED PROJECT ONLY.

TUUSSO ENERGY

MaxPV ENGINEERING DEVELOPMENT
3231 POLYGON // SACRAMENTO, CA
WWW.MAXPVENGINEERING.COM

REV. NO.	DATE	DESCRIPTION	BY	CHK.	APR.
A	08-09-17	FOR PLAN REVIEW	LB	–	–

OWNER: TUUSSO ENERGY

PROJECT SITE: PENSTEMON SOLAR PROJECT

DRAWING: SINGLE LINE DIAGRAM

DRAWING NO. E-601

THIS PRINT IS NOT TO BE USED FOR CONSTRUCTION UNLESS NOTED AND SIGNED OK FOR CONSTRUCTION ABOVE LAST REVISION.

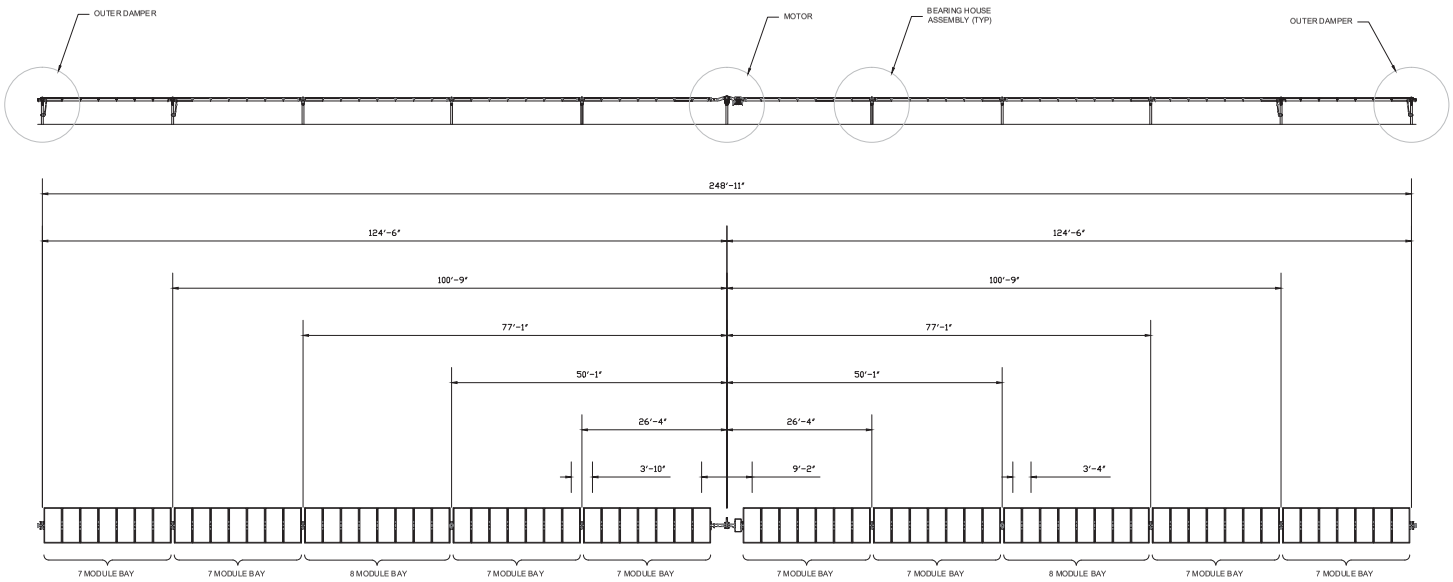

A 72 MODULE TRACKER

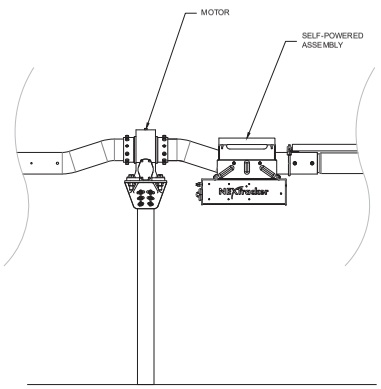

B MOTOR PILE DETAIL

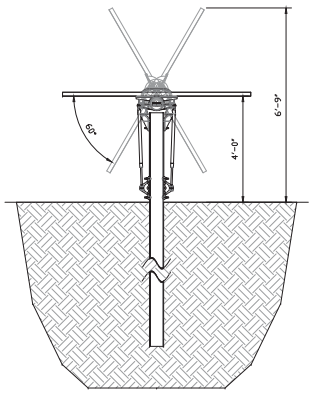

C TRACKER PROFILE

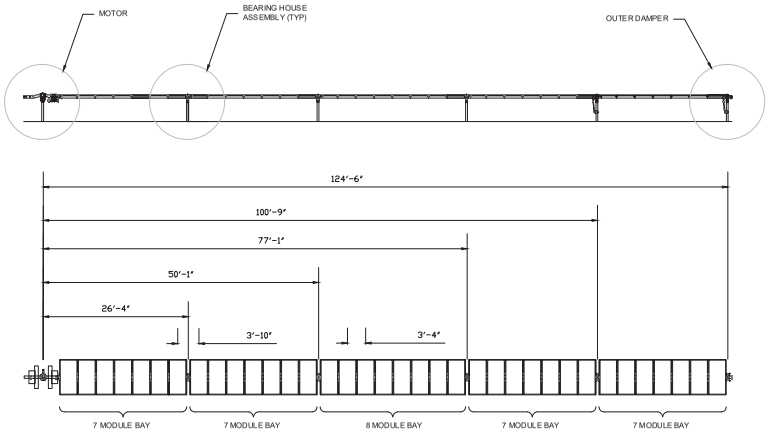

D 36 MODULE TRACKER

NOTES:

1. NONE.

KEYED NOTES:

1. NONE.

TUUSSO ENERGY

MaxPV ENGINEERING DEVELOPMENT
3131 POLYGON // SACRAMENTO, CA
WWW.MAXPVENGINEERING.COM

REV. NO.	DATE	DESCRIPTION	BY	CHK.	APR.
A	08-09-17	FOR PLAN REVIEW	LB	–	–

OWNER: TUUSSO ENERGY

PROJECT SITE: PENSTEMON SOLAR PROJECT

DRAWING: TRACKER ELEVATIONS

DRAWING NO. E-701

THIS PRINT IS NOT TO BE USED FOR CONSTRUCTION UNLESS NOTED AND SIGNED OK FOR CONSTRUCTION ABOVE LAST REVISION.

THE INFORMATION CONTAINED IN THESE DRAWINGS ARE CONFIDENTIAL AND ARE INTENDED FOR THE DESCRIBED PROJECT ONLY.

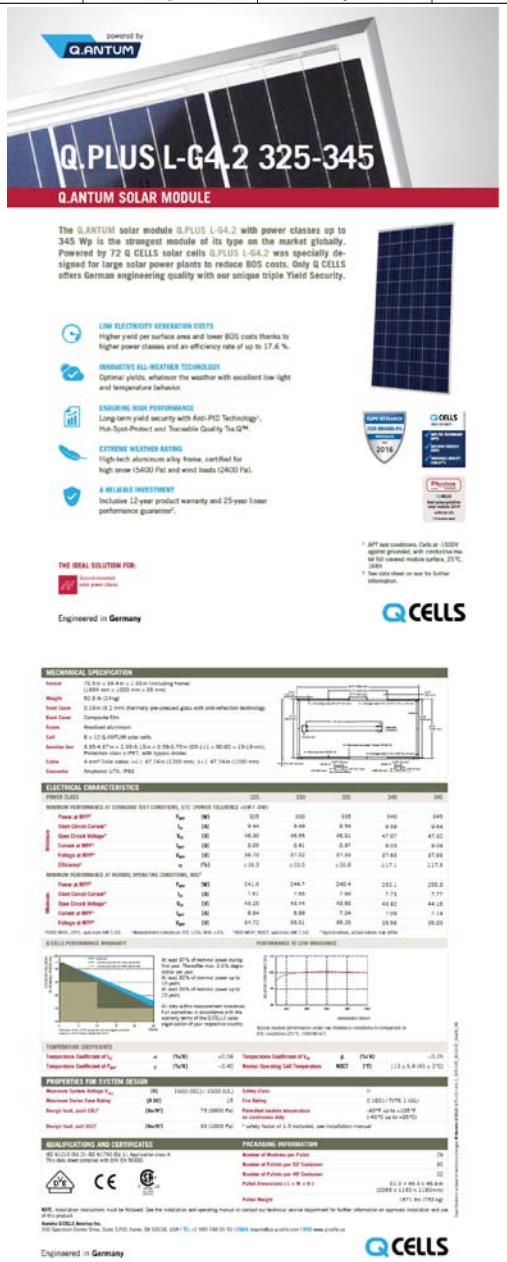

TUUSSO ENERGY

MaxPV ENGINEERING DEVELOPMENT
505 POLVOSO // SACRAMENTO, CA
WWW.MAXPVENGINEERING.COM

REV. NO.	DATE	DESCRIPTION	BY	CHK.	APR.
A	08-09-17	FOR PLAN REVIEW	LB	–	–

OWNER: TUUSSO ENERGY

PROJECT SITE: PENSTEMON SOLAR PROJECT

DRAWING: MAJOR EQUIPMENT SPECIFICATIONS

DRAWING NO. E-901

THE INFORMATION CONTAINED IN THESE DRAWINGS ARE CONFIDENTIAL AND ARE INTENDED FOR THE DESCRIBED PROJECT ONLY.

THIS PRINT IS NOT TO BE USED FOR CONSTRUCTION UNLESS NOTED AND SIGNED OK FOR CONSTRUCTION ABOVE LAST REVISION.

TUUSSO ENERGY - TYPHA SITE

A PORTION OF THE EAST 1/2 OF THE NE 1/4 OF SECTION 30, T. 18 N., R. 18 E., W.M.
KITTITAS COUNTY, STATE OF WASHINGTON

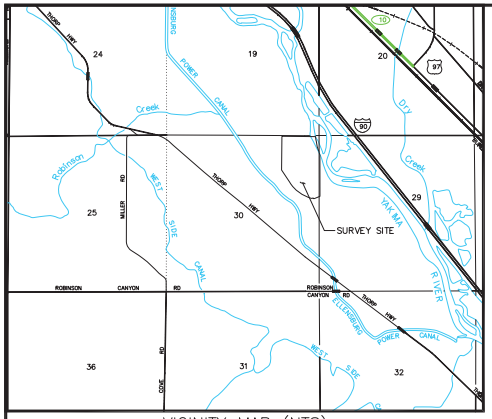

VICINITY MAP (NTS)

NORTH

08 37.5 75 150

SCALE 1" = 150'

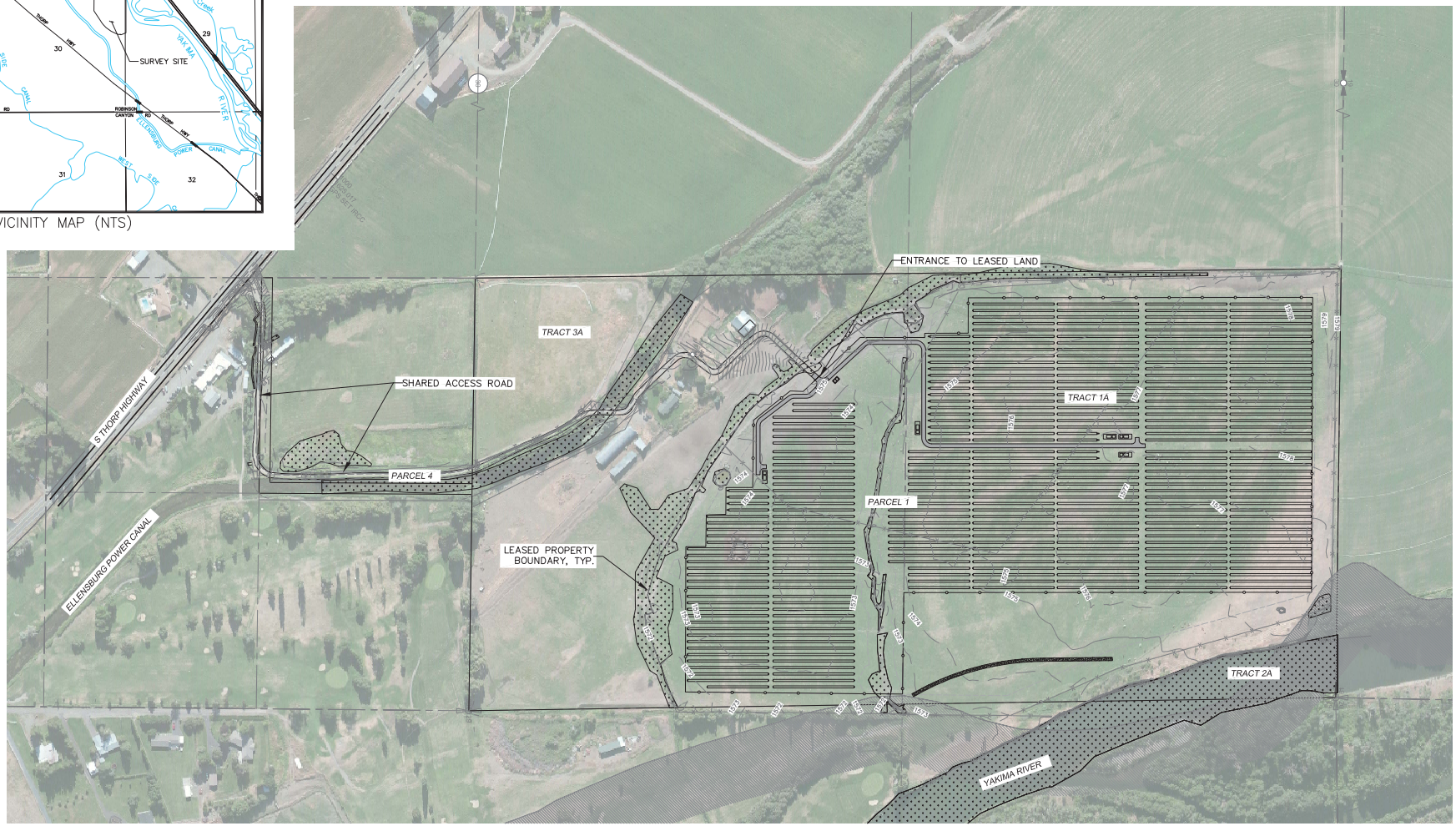

SHEET INDEX:

TITLE	NO.
COVER SHEET & OVERALL SITE PLAN	C1.0
NOTES, LEGEND & ABBREVIATIONS	C1.1
TESC. GRADING, AND DRAINAGE PLAN	C2.0
TESC DETAILS AND STANDARD DETAILS	C2.1

NOTES:

1. ALL CONSTRUCTION TECHNIQUES AND MATERIALS SHALL BE IN ACCORDANCE WITH THE CURRENT STATE OR COUNTY STANDARDS (AS APPLICABLE) AND AS SHOWN IN THESE PLANS.
2. BOUNDARY AND TOPOGRAPHIC SURVEY SHOWN HEREON WAS PREPARED BY ENCOMPASS ENGINEERING AND SURVEYING IN MAY 2017 UNDER DIRECT SUPERVISION OF DUSTIN PIERCE, PLS #45503.

PROPERTY INFORMATION:

APPLICANT:	TUUSSO ENERGY, LLC 500 YALE AVE N SEATTLE, WA 98109
PARCEL NUMBERS:	712633, 752633, 802633
PARCEL 1 SIZE:	80.44 ACRES
TRACT 1A SIZE:	54.29 ACRES (LEASED)
TRACT 2A SIZE:	1.85 ACRES (LEASED)
TRACT 3A SIZE:	24.30 ACRES (NOT LEASED)
PARCEL 4 SIZE:	0.97 ACRES (NOT LEASED)
PROPERTY ADDRESS:	TBD, ELLENSBURG, WA 98926
ZONE:	COMMERCIAL AGRICULTURAL
IRRIGATION DISTRICT:	WEST SIDE, PACKWOOD

INDEX LOCATION
SEC. 30 T. 18 N.R. 18 E.W.M.

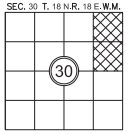

811
Know what's below.
Call before you dig.

REVISIONS		
DESCRIPTION	BY	DATE

© THE PLANS SET FORTH ON THIS SHEET ARE AND SHALL REMAIN THE PROPERTY OF ENCOMPASS ENGINEERING & SURVEYING.

TUSSO ENERGY, LLC
TYPHA SITE
COVER SHEET AND OVERALL SITE PLAN

Encompass
ENGINEERING & SURVEYING
Western Washington Division
165 NE Juniper Street, Suite 201 • Issaquah, WA 98027 • Phone: (425) 392-0250 • Fax: (425) 391-3055
407 Sunflower Blvd. • Cle Elum, WA 98922 • Phone: (509) 674-7433 • Fax: (509) 674-7419
Eastern Washington Division

JOB NO.	17019
DATE	Sept. 27 2017
SCALE	AS SHOWN
DESIGNED	SF
DRAWN	SF
CHECKED	TML
APPROVED	TML
SHEET	C1.0

STANDARD PLAN NOTES:

1. ALL CONSTRUCTION TECHNIQUES AND MATERIALS SHALL BE IN ACCORDANCE WITH THE CURRENT STATE OR COUNTY STANDARDS AND AS SHOWN IN THESE PLANS.
2. A COPY OF THE APPROVED PLANS MUST BE ON SITE WHENEVER CONSTRUCTION IS IN PROGRESS.
3. THE CONTRACTOR SHALL OBTAIN ALL PERMITS REQUIRED FOR WORK THAT ARE NOT PROVIDED BY THE OWNER PRIOR TO START OF CONSTRUCTION.
4. PAVED OR SIMILAR ESTABLISHED SURFACES INCLUDING ROADWAYS, SIDEWALKS AND CURBS THAT ARE TO REMAIN BUT ARE DAMAGED BY NEW CONSTRUCTION SHALL BE REPAIRED AS REQUIRED BY THE INSPECTOR.
5. ALL SURVEYING AND STAKING OF IMPROVEMENTS SHALL BE APPROVED BY THE OWNER. CONTRACTOR SHALL COORDINATE AND VERIFY WITH THE OWNER PRIOR TO OBTAINING STAKING SERVICES.
6. THE CONTRACTOR SHALL NOTIFY THE KITTITAS COUNTY FIRE DISTRICT (509-386-1495) TWENTY-FOUR (24) HOURS IN ADVANCE OF ALL WATER SERVICE INTERRUPTIONS, HYDRANT SHUT-OFFS, AND STREET CLOSURES OR OTHER ACCESS BLOCKAGE. THE CONTRACTOR SHALL ALSO NOTIFY THE DISTRICT OF ALL NEW, RELOCATED, OR ELIMINATED HYDRANTS RESULTING FROM THIS WORK.
7. ALL LOCATIONS OF EXISTING UTILITIES SHOWN HEREON HAVE BEEN ESTABLISHED BY FIELD SURVEY OR OBTAINED FROM AVAILABLE RECORDS AND SHOULD THEREFORE BE CONSIDERED APPROXIMATE ONLY AND NOT NECESSARILY COMPLETE. IT IS THE SOLE RESPONSIBILITY OF THE CONTRACTOR TO INDEPENDENTLY VERIFY THE ACCURACY OF ALL UTILITY LOCATIONS SHOWN AND TO FURTHER DISCOVER AND AVOID ANY OTHER UTILITIES NOT SHOWN HEREON WHICH MAY BE AFFECTED BY THE IMPLEMENTATION OF THIS PLAN.
8. THE CONTRACTOR SHALL LOCATE AND PROTECT ALL ACTIVE CASTINGS AND UTILITIES DURING CONSTRUCTION AND SHALL CONTACT THE UNDERGROUND UTILITIES LOCATOR SERVICE (1-800-424-5555 OR 811) AT LEAST 48 HOURS PRIOR TO CONSTRUCTION.
9. THE CONTRACTOR SHALL ADJUST ALL EXISTING MANHOLE RIMS, DRAINAGE STRUCTURE LIDS, VALVE BOXES AND UTILITY ACCESS STRUCTURES TO FINISH GRADE WITHIN AREAS AFFECTED BY THE PROPOSED IMPROVEMENTS.
10. THE CONTRACTOR SHALL PROVIDE FOR ALL COMPACTION TESTS REQUIRED BY THE INSPECTOR.
11. BACKFILL MATERIAL SHALL MEET STATE OR COUNTY STANDARDS.
12. INSPECTION AND ACCEPTANCE OF ALL WORK WILL BE ACCOMPLISHED BY THE DESIGNATED INSPECTOR. IT SHALL BE THE CONTRACTOR'S RESPONSIBILITY TO COORDINATE AND SCHEDULE APPROPRIATE INSPECTIONS, ALLOWING PROPER ADVANCE NOTICE. THE INSPECTOR MAY REQUIRE RECONSTRUCTION OF ITEMS THAT DO NOT MEET THE CONTRACT DOCUMENTS OR THAT WERE CONSTRUCTED WITHOUT INSPECTION.
13. THE CONTRACTOR SHALL PROVIDE AND MAINTAIN BEST MANAGEMENT PRACTICES AS SHOWN HEREIN TO INSURE THAT SEDIMENT-LADEN WATER DOES NOT ENTER THE WATER OF THE STATE. AS CONSTRUCTION PROGRESSES AND UNEXPECTED (SEASONAL) CONDITIONS DICTATE, ADDITIONAL BEST MANAGEMENT PRACTICES MAY BE REQUIRED. THEREFORE, DURING THE COURSE OF CONSTRUCTION IT SHALL BE THE OBLIGATION AND RESPONSIBILITY OF THE CONTRACTOR TO ADDRESS ANY NEW CONDITIONS THAT MAY BE CREATED BY HIS ACTIVITIES AND TO PROVIDE ADDITIONAL FACILITIES THAT MAY BE NEEDED TO PROTECT ADJACENT PROPERTIES.
14. THE CONTRACTOR SHALL KEEP ALL STREETS AND PUBLIC RIGHT-OF-WAY CLEAN AT ALL TIMES BY SWEEPING.
15. CONTRACTOR SHALL PROVIDE TRAFFIC CONTROL AS NECESSARY THROUGHOUT THE PROJECT. TRAFFIC CONTROL SHALL BE IN ACCORDANCE WITH THE MUTCD, STATE, AND/OR COUNTY STANDARDS.
16. CONTRACTOR SHALL NOT MAKE ANY REVISIONS IN THE FIELD WITHOUT PRIOR WRITTEN APPROVAL BY THE ENGINEER.
17. THE CONTRACTOR SHALL BE RESPONSIBLE FOR PROVIDING ADEQUATE SAFEGUARDS, SAFETY DEVICES, PROTECTIVE EQUIPMENT, FLAGGERS, AND ANY OTHER NEEDED ACTIONS TO PROTECT THE LIFE, HEALTH, AND SAFETY OF THE PUBLIC, AND TO PROTECT PROPERTY IN CONNECTION WITH THE PERFORMANCE OF WORK COVERED BY THE CONTRACTOR. ANY WORK WITHIN THE TRAVELED RIGHT-OF-WAY THAT MAY INTERRUPT NORMAL TRAFFIC FLOW SHALL REQUIRE AT LEAST ONE FLAGGER FOR EACH LANE OF TRAFFIC AFFECTED. ALL SECTIONS OF THE WSDOT STANDARD SPECIFICATIONS 1-07.23 – TRAFFIC CONTROL, SHALL APPLY.
18. ANY TRENCH DEEPER THAN 5 FEET WILL REQUIRE SHORING FOR TRENCH WALL STABILIZATION.

GENERAL TESC NOTES:

1. APPROVAL OF THIS TEMPORARY EROSION AND SEDIMENTATION CONTROL (TESC) PLAN DOES NOT CONSTITUTE AN APPROVAL OF PERMANENT ROAD OR DRAINAGE DESIGN (E.G. SIZE AND LOCATION OF ROADS, PIPES, RESTRICTORS, CHANNELS, RETENTION FACILITIES, UTILITIES, ETC.).
2. THE IMPLEMENTATION OF THESE TESC PLANS AND THE CONSTRUCTION, MAINTENANCE, REPLACEMENT, AND UPGRADING OF THESE TESC FACILITIES IS THE RESPONSIBILITY OF THE APPLICANT OR A TESC SUPERVISOR UNTIL ALL CONSTRUCTION IS APPROVED.
3. THE BOUNDARIES OF THE CLEARING LIMITS SHOWN ON THIS PLAN SHALL BE CLEARLY FLAGGED BY A CONTINUOUS LENGTH OF SURVEY TAPE (OR FENCING, IF REQUIRED) PRIOR TO CONSTRUCTION. DURING THE CONSTRUCTION PERIOD, NO DISTURBANCE BEYOND THE CLEARING LIMITS SHALL BE PERMITTED. THE CLEARING LIMITS SHALL BE MAINTAINED BY THE APPLICANT/TESC SUPERVISOR FOR THE DURATION OF CONSTRUCTION.
4. THE TESC FACILITIES SHOWN ON THIS PLAN MUST BE CONSTRUCTED PRIOR TO OR IN CONJUNCTION WITH ALL CLEARING AND GRADING SO AS TO ENSURE THAT THE TRANSPORT OF SEDIMENT TO SURFACE WATERS, DRAINAGE SYSTEMS, AND ADJACENT PROPERTIES IS MINIMIZED.
5. THE TESC FACILITIES SHOWN ON THIS PLAN ARE THE MINIMUM REQUIREMENTS FOR ANTICIPATED SITE CONDITIONS. DURING THE CONSTRUCTION PERIOD, THESE TESC FACILITIES SHALL BE UPGRADED AS NEEDED FOR UNEXPECTED STORM EVENTS AND MODIFIED TO ACCOUNT FOR CHANGING SITE CONDITIONS (E.G. ADDITIONAL SUMP PUMPS, RELOCATION OF DITCHES AND SILT FENCES, ETC.).
6. ANY AREAS OF EXPOSED SOILS, INCLUDING ROADWAY EMBANKMENTS, THAT WILL NOT BE DISTURBED FOR TEN DAYS DURING THE WET SEASON OR FOURTEEN DAYS DURING THE DRY SEASON SHALL BE IMMEDIATELY STABILIZED WITH THE APPROVED TESC METHODS (E.G., SEEDING, MULCHING, PLASTIC COVERING, ETC.).
7. ANY AREA NEEDING TESC MEASURES, NOT REQUIRING IMMEDIATE ATTENTION, SHALL BE ADDRESSED WITHIN FIFTEEN (15) DAYS.
8. THE TESC FACILITIES ON INACTIVE SITES SHALL BE INSPECTED AND MAINTAINED A MINIMUM OF ONCE A MONTH OR WITHIN 48 HOURS FOLLOWING A STORM EVENT.
9. AT NO TIME SHALL MORE THAN ONE (1) FOOT OF SEDIMENT BE ALLOWED TO ACCUMULATE WITHIN A CATCH BASIN. ALL CATCH BASINS AND CONVEYANCE LINES SHALL BE CLEANED PRIOR TO PAVING. THE CLEANING OPERATION SHALL NOT FLUSH SEDIMENT-LADEN WATER INTO THE DOWNSTREAM SYSTEM.
10. STABILIZED CONSTRUCTION ENTRANCES AND ROADS SHALL BE INSTALLED AT THE BEGINNING OF CONSTRUCTION AND MAINTAINED FOR THE DURATION OF THE PROJECT. ADDITIONAL MEASURES, SUCH AS WASH PADS, MAY BE REQUIRED TO ENSURE THAT ALL PAVED AREAS ARE KEPT CLEAN FOR THE DURATION OF THE PROJECT.
11. ANY PERMANENT RETENTION/DETENTION FACILITY USED AS A TEMPORARY SETTLING BASIN SHALL BE MODIFIED WITH THE NECESSARY EROSION CONTROL MEASURES AND SHALL PROVIDE ADEQUATE STORAGE CAPACITY. IF THE PERMANENT FACILITY IS TO FUNCTION ULTIMATELY AS AN INFILTRATION SYSTEM, THE TEMPORARY FACILITY MUST BE GRADED SO THAT THE BOTTOM AND SIDES ARE AT LEAST ONE FOOT ABOVE THE FINAL GRADE OF THE PERMANENT FACILITY.
12. WHERE STRAW MULCH FOR TEMPORARY EROSION CONTROL IS REQUIRED, IT SHALL BE APPLIED AT A MINIMUM THICKNESS OF TWO INCHES

STANDARD GRADING NOTES:

1. ALL GRADING ACTIVITIES, INCLUDING EXCAVATION, BACKFILL AND COMPACTION, SHALL BE DONE IN ACCORDANCE WITH STATE OR COUNTY STANDARDS AS APPLICABLE.
2. WITHIN ANY AREAS TO RECEIVE STRUCTURAL FILL, PAVEMENTS OR HARDSCAPE, THE SUBGRADE SHALL BE SCARIFIED, MOISTURE CONDITIONED, AND COMPACTED TO AT LEAST 95% MAXIMUM DENSITY (ASTM D 1557).
3. CONTRACTOR SHALL OBTAIN AN APPROVAL BY THE GEOTECHNICAL ENGINEER PRIOR TO PROCEEDING WITH ANY OVEREXCAVATION. CONTRACTOR SHALL VERIFY THE AMOUNT OF OVEREXCAVATION WITH GEOTECHNICAL ENGINEER.
4. COMPACTION SHALL BE DONE PER STATE OR COUNTY STANDARDS AS APPLICABLE. SITE EXCAVATION AND/OR SUBGRADE PREPARATION SHALL BE COMPLETED BEFORE PLACING STRUCTURAL FILL. COMPACTION SHALL BE VERIFIED BY DENSITY TESTING.
5. ALL TEMPORARY CUT SLOPES SHALL NOT EXCEED 1.5H:1V. ALL PERMANENT CUT SLOPES SHALL NOT EXCEED 2H:1V OR AS SHOWN ON PLANS. ALL PERMANENT FILL SLOPES SHALL NOT EXCEED 2H:1V.
6. CONTRACTOR SHALL IMPLEMENT APPROPRIATE PROTECTION AND TRAFFIC CONTROL DURING CONSTRUCTION TO DIRECT TRUCK TRAFFIC.
7. ANY AND ALL FILL MATERIAL PLACED ON THE LOT SHALL BE COMPACTED AND A COMPACTION INSPECTION REPORT FOR THE COMPACTION AND BEARING CAPACITY OF THAT FILL MATERIAL SHALL BE PROVIDED TO THE STATE OR COUNTY AS APPLICABLE WITHIN 60 DAYS OF THE PLACEMENT OF THE FILL MATERIAL.
8. ALL EXCESS SOIL SHALL BE OFF-HAULED TO A LEGAL DISPOSAL SITE. NO EXCESS SOIL SHALL BE SPREAD ON THE SITE WITHOUT CLEARLY BEING SHOWN ON THE APPROVED GRADING PLAN.
9. ALL CUT AND FILL SLOPES AND ALL EXPOSED DIRT SHALL BE PLANTED, MULCHED, WATERED AND MAINTAINED UNTIL EFFECTIVE EROSION CONTROL HAS BEEN ESTABLISHED TO THE SATISFACTION OF THE STATE OR COUNTY AS APPLICABLE.
10. CONTRACTOR SHALL PROVIDE HIS/HER OWN EARTHWORK CALCULATIONS FOR ALL CUT AND FILL OPERATIONS.

ABBREVIATIONS:

AC – ASPHALT CONCRETE
ACP – ABESTOS CEMENT PIPE
ADD'L – ADDITIONAL
AD – AREA DRAIN
ADJ – ADJACENT
ANSI – AMERCIAN NATIONAL STANDARDS INSTITUTE
ALT – ALTERNATE
ALUM – ALUMINUM
APPROX – APPROXIMATE(LY)
ARCH – ARCHITECT(URAL)
AP – ANGLE POINT
ASPH – ASPHALT
ASSY – ASSEMBLY
ASTM – AMERICAN SOCIETY OF TESTING AND MATERIALS
AVE – AVENUE
BC – BACK OF CURB
BF – BLIND FLANGE
BLDG – BUILDING
BLDG – BUILDING CORNER
BLK – BLOCK
BLVD – BOULEVARD
BM – BENCHMARK
BNDY – BOUNDARY
BO – BLOW OFF
BOW – BOTTOM OF WALL (AT FINISHED GRADE)
BSBL – BUILDING SETBACK LINE
BVC – BEGINNING OF VERTICAL CURVE
BVCE – BEGIN VERTICAL CURVE ELEVATION
BVCS – BEGIN VERTICAL CURVE STATION
BW – BACK OF WALK
CB – CATCH BASIN
CF – CUBIC FEET (FOOT)
CIP – CAST IRON PIPE
CJ – CONSTRUCTION JOINT
CL – CLASS
C/L – CENTER LINE
CLR – CLEARENCE
CMP – CORRUGATED METAL PIPE
CO – CLEAN OUT
CONN – CONNECTION
CONT – CONTINUOUS (CONTINUED)
CONTR – CONTRACTOR
C, CONC – CONCRETE
CONST – CONSTRUCTION
CP – CONTROL POINT
CFS – CUBIC FEET PER SECOND
CTR – CENTER(ED)
CTV – CABLE TV
C&G – CURB AND GUTTER
CY – CUBIC YARD
DCVA – DOUBLE CHECK VALVE ASSEMBLY
DDCV – DOUBLE DETECTOR CHECK VALVE
DEPT. – DEPARTMENT
DET – DETAIL OR DETENTION
DIP – DUCTLE IRON PIPE
DIA(S) – DIAMETER
DIM – DIMENSION
DOT – DEPARTMENT OF TRANSPORTATION
DS – DOWN SPOUT
DWG – DRAWING
E – EAST(ING)
EA – EACH
EL – ELEVATION
ELEC – ELECTRICAL
EP – EDGE OF PAVEMENT
EQUIV – EQUIVALENT
EVC – END OF VERTICAL CURVE
EVCE – END OF VERTICAL CURVE ELEVATION
EVCS – END OF VERTICAL CURVE STATION
EX, EXIST – EXISTING
FC – FACE OF CURB
FD – FLOOR DRAIN
FDC – FIRE DEPARTMENT CONNECTION
FFE – FINISH FLOOR ELEVATION
FH – FIRE HYDRANT
FL – FLANGED OR FLOW LINE
FLR – FLOOR
FS – FINISHED SURFACE
FT (') – FOOT (FEET)
FTG – FOOTING
G – GAS MAIN
GA – GAUGE
GALV – GALVANIZED
GB – GRADE BREAK
GM– GAS METER
GRD – GRADE
HB – HOSE BIBB
HDPE – HIGH DENSITY POLYETHYLENE
HORIZ (H) – HORIZONTAL
HT – HEIGHT
HYD – HYDRANT
ID – INSIDE DIAMETER
E – INVERT ELEVATION
IN (") – INCHES
INV – INVERT
IRR – IRRIGATION WATER
L – LENGTH
LB, # – POUND(S)
LF – LINEAR FEET
LN – LANE
MAT'L – MATERIAL
MAX – MAXIMUN
MFR – MANUFACTURER
MH – MANHOLE
MIN – MINIMUM
MISC – MISCELLANEOUS
MJ – MECHANICAL JOINT
N – NORTH(ING)
NO (#) – NUMBER
N.T.S. – NOT TO SCALE
O.C. – ON CENTER
O.D. – OUTSIDE DIAMETER
O/W – OIL WATER
P – POWER
PC – POINT OF CURVATURE
PERF – PERFORATED
PI – POINT OF INTERSECTION
PIV – POST INDICTOR VALVE
PL – PROPERTY LINE
PP – POWER POLE
PROV – PROVIDED
PSF – POUNDS PER SQUARE FOOT
PSI – POINDS PER SQUARE INCH
PT – POINT OF TANGENCY
PVC – POLYVINYL CHLORIDE
PVI – POINT OF VERTICAL INTERSECTION
PVMT – PAVEMENT
PVT – POINT OF VERTICAL TANGENT
QTY – QUANTITY
RAD (R) – RADIUS
RCP – REINFORCED CONCRETE PIPE
RD – ROAD
REF – REFERENCE
REINF – REINFORCED
REQ – REQUIRED
RET – RETAINING
ROW – RIGHT-OF-WAY
RR – RAILROAD
S – SOUTH
S, SL – SLOPE
SCH – SCHEDULE
SD – STORM DRAIN
SF – SQUARE FOOT
SHT – SHEET
SIM – SIMILAR
SPEC – SPECIFICATION(S)
SQ – SQUARE
SS – SANITARY SEWER
ST – STREET
STA – STATION
STD – STANDARD
STL – STEEL
T – TELEPHONE WIRE
TBM – TEMPORARY BENCH MARK
TC – TOP OF CURB
TEMP – TEMPORARY
TG/RIM – TOP OF GRATE/RIM
THRU – THROUGH
TOE – TOE OF WALL OR SLOPE
TOP – TOP OF WALL OR SLOPE
TOW – TOP OF WALL
TYP – TYPICAL
VC – VERTICAL CURVE
VOL – VOLUME
W – WEST
W/ – WITH
WM – WATER METER
W/O – WITHOUT
WQ – WATER QUALITY
WT – WEIGHT
WWF – WELDED WIRE FABRIC
WV – WATER VALVE
YD – YARD DRAIN

LEGEND

EXISTING: PROPOSED:

BOUNDARY LINE/RIGHT-OF-WAY
LOT LINE
STREET MONUMENT (IN CONCRETE)
PROPERTY CORNER
BENCHMARK/CONTROL POINT
TEMPORARY BENCHMARK (TBM)
EASEMENT LINE
CENTERLINE
CURB/GUTTER/SIDEWALK LINE
EDGE OF PAVEMENT LINE
CHAIN LINK FENCE LINE
SIGN
STREET LIGHT (ELECTROLIER)
GRADE BREAK LINE
CONTOUR LINE (MAJOR) 1650
CONTOUR LINE (MINOR) 1651
CATCH BASIN (TYPE 1)
STORM DRAIN MANHOLE/CATCH BASIN TYPE 2
STORM DRAIN LINE SD
CONTROL STRUCTURE
RIP-RAP PAD
SANITARY SEWER LINE SS
SANITARY SEWER CLEANOUT
SANITARY SEWER MANHOLE
WATERMAIN LINE W
GATE VALVE (MECHANICAL JOINT)
GATE VALVE (FLANGE)
WATER METER
FIRE HYDRANT
CAP
GAS LINE G
GAS VALVE
UNDERGROUND ELECTRIC LINE E
POWER POLE / UTILITY POLE
GUY ANCHOR
ELECTRICAL TRANSFORMER / VAULT P
TELEPHONE VAULT/PEDESTAL T
TELEPHONE MANHOLE T
100 YR FLOODPLAIN HATCH
CONCRETE HATCH
GRAVEL HATCH
ALL WEATHER ROAD HATCH (COMPACTED SOIL OR GRAVEL)
PROPOSED LANDSCAPING STRIP

CONTRACTOR RESPONSIBILITY:

CONTRACTOR AGREES THAT HE SHALL ASSUME SOLE AND COMPLETE RESPONSIBILITY FOR JOB SITE CONDITIONS, INCLUDING THE SAFETY OF ALL PERSONS AND PROPERTY, DURING THE COURSE OF CONSTRUCTION OF THIS PROJECT, AND THAT THIS REQUIREMENT SHALL APPLY CONTINUOUSLY AND NOT BE LIMITED TO NORMAL WORKING HOURS. THE CONTRACTOR SHALL DEFEND, INDEMNIFY AND HOLD THE OWNER AND THE ENGINEER HARMLESS FROM ANY AND ALL LIABILITY, REAL OR ALLEGED, IN CONNECTION WITH THE PERFORMANCE OF WORK ON THIS PROJECT, EXCEPTING FOR LIABILITY ARISING FROM THE SOLE NEGLIGENCE OF THE OWNER OR THE ENGINEER.

DISCREPANCIES:

IF THERE ARE ANY DISCREPANCIES BETWEEN DIMENSIONS IN DRAWINGS AND EXISTING CONDITIONS WHICH WILL AFFECT THE WORK, THE CONTRACTOR SHALL BRING SUCH DISCREPANCIES TO THE ATTENTION OF THE ENGINEER FOR ADJUSTMENT BEFORE PROCEEDING WITH THE WORK. THE CONTRACTOR SHALL BE RESPONSIBLE FOR THE PROPER FITTING OF ALL WORK AND FOR THE COORDINATION OF ALL TRADES, SUBCONTRACTORS, AND PERSONS ENGAGED UPON THIS CONTRACT.

REVISIONS		
DESCRIPTION	BY	DATE

© THE PLANS SET FORTH ON THIS SHEET ARE AND SHALL REMAIN THE PROPERTY OF ENCOMPASS ENGINEERING & SURVEYING.

TUSSO ENERGY, LLC
TYPHA SITE
NOTES, LEGEND & ABBREVIATIONS

Encompass
ENGINEERING & SURVEYING
Western Washington Division
165 NE Juniper Street, Suite 201 ■ Issaquah, WA 98027 ■ Phone: (425) 392-0250 ■ Fax: (425) 391-3055
Eastern Washington Division
407 Stellhorse Blvd ■ Cle Elum, WA 98922 ■ Phone: (509) 674-7433 ■ Fax: (509) 674-7419

JOB NO.	17019
DATE	Sept. 27 2017
SCALE	AS SHOWN
DESIGNED	SF
DRAWN	SF
CHECKED	TML
APPROVED	TML
SHEET	C1.1

TUUSSO ENERGY - TYPHA SITE

A PORTION OF THE EAST 1/2 OF THE NE 1/4 OF SECTION 30, T. 18 N., R. 18 E., W.M.
KITTITAS COUNTY, STATE OF WASHINGTON

NORTH

SCALE 1" = 100'

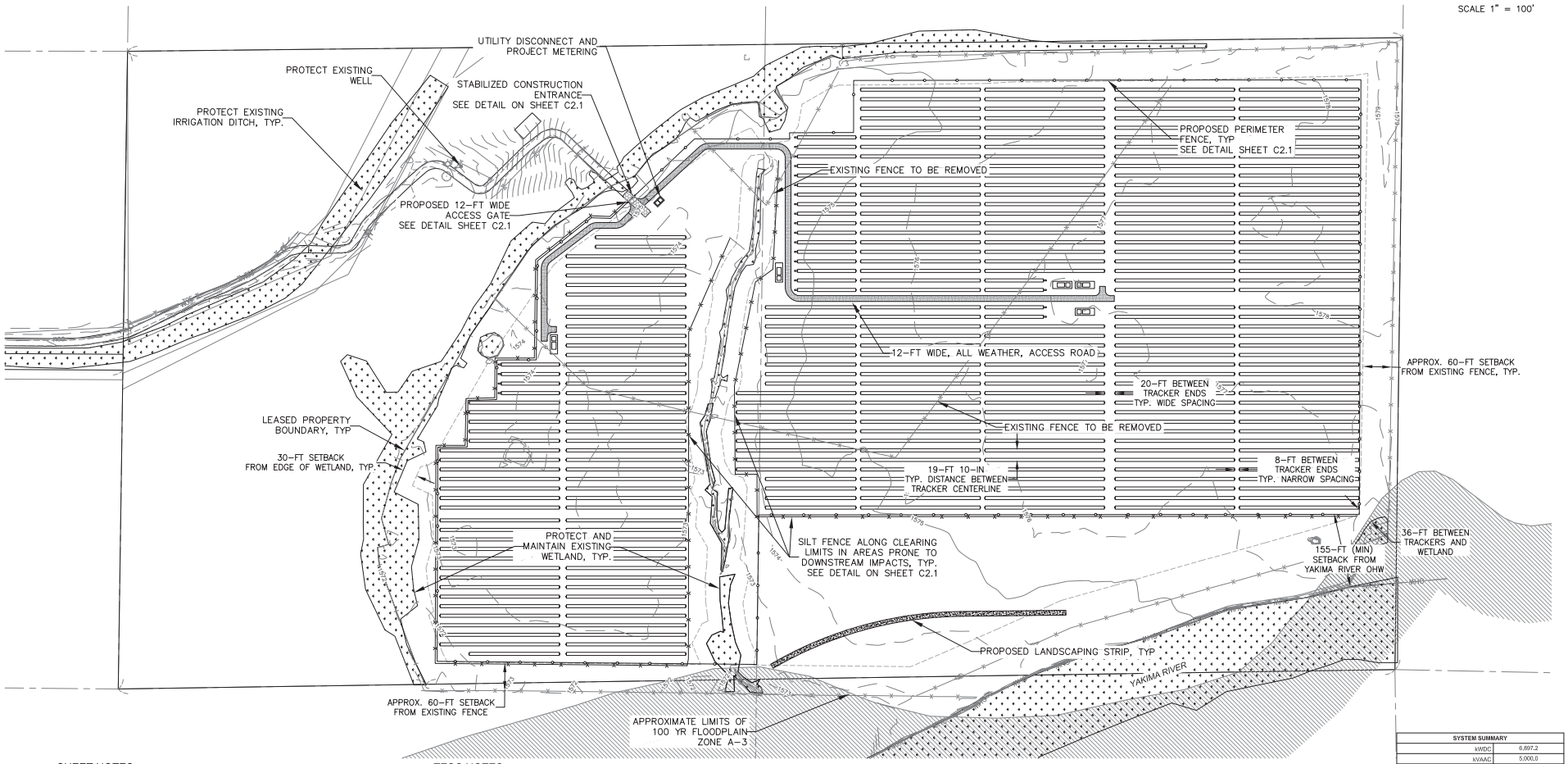

SHEET NOTES:

1. REFER TO STANDARD PLAN NOTES ON SHEET C1.1.
2. ALL CONSTRUCTION SHALL BE IN ACCORDANCE WITH STATE OR COUNTY STANDARDS AS APPLICABLE. IT SHALL BE THE SOLE RESPONSIBILITY OF THE APPLICANT AND THE PROFESSIONAL CIVIL ENGINEER TO CORRECT ANY ERROR, OMISSION, OR VARIATION FROM THE ABOVE REQUIREMENTS FOUND IN THESE PLANS.
3. THE CONTRACTOR SHALL BE RESPONSIBLE FOR PROVIDING ADEQUATE SAFEGUARDS, SAFETY DEVICES, PROTECTIVE EQUIPMENT, FLAGGERS, AND ANY OTHER NEEDED ACTIONS TO PROTECT THE LIFE, HEALTH, AND SAFETY OF THE PUBLIC, AND TO PROTECT PROPERTY IN CONNECTION WITH THE PERFORMANCE OF WORK COVERED BY THE CONTRACTOR. ANY WORK WITHIN THE TRAVELED RIGHT-OF-WAY THAT MAY INTERRUPT NORMAL TRAFFIC FLOW SHALL REQUIRE AT LEAST ONE FLAGGER FOR EACH LANE OF TRAFFIC AFFECTED. ALL SECTIONS OF THE WSDOT STANDARD SPECIFICATIONS 1-07.23 - TRAFFIC CONTROL, SHALL APPLY.
4. ANY TRENCH DEEPER THAN 5 FEET WILL REQUIRE SHORING FOR TRENCH WALL STABILIZATION.

TESC NOTES:

1. SILT FENCE TO BE INSTALLED AS STAND-ALONE UNLESS RUNNING ALONG EXIST. FENCE.
2. CONTRACTOR'S STAGING AREA AND STOCKPILE AREAS SHALL BE DETERMINED PRIOR TO START OF CONSTRUCTION.

TESC LEGEND:

SILT FENCE - SEE DETAIL ON SHEET C2.1

CONSTRUCTION ENTRANCE - SEE DETAIL ON SHEET C2.1

RECOMMENDED CONSTRUCTION SEQUENCE:

(1) PRE-CONSTRUCTION MEETING.
(2) GRADE AND INSTALL CONSTRUCTION ENTRANCE(S).
(3) INSTALL PERIMETER PROTECTION (SILT FENCE, BRUSH BARRIER, ETC.).
(4) GRADE AND STABILIZE CONSTRUCTION ROADS.
(5) INSTALL WIDE FLANGE STEEL PILES.
(6) INSTALL ELECTRICAL UNDERGROUND AND MECHANICAL TRACKERS
(7) INSTALL PANELS
(8) PERFORM ANY REQUIRED SITE RESTORATION

LEGEND

INVERTER STATION
72 MODULE TRACKER
54 MODULE TRACKER
36 MODULE TRACKER

SYSTEM SUMMARY	
kWDC	6,897.2
kVAAC	5,000.0
INVERTER QTY.	5
MODULE QTY.	19,992
DC SYSTEM VOLTAGE (V)	1000
DC SYSTEM VOLTAGE (kV)	12.47
INVERTER AC RATING (KVA)	1000
PV MODULE MODEL #	Q.CELLS 345W
PV MODULE NAMEPLATE (W)	345
RACKING SYSTEM	NEXTRACKER
GROUND COVERATE RATIO	0.33
DC:AC RATIO	1.38
MODULE TILT	TRACKER, +/-60°
NORTH AREA	
kWDC	5,133.6
kVAAC	4,000.0
DC:AC RATIO	1.28
INVERTER QTY.	4
SOUTH AREA	
kWDC	1,763.6
kVAAC	1,000.0
DC:AC RATIO	1.76
INVERTER QTY.	1

REVISIONS		
DESCRIPTION	BY	DATE

© THE PLANS SET FORTH ON THIS SHEET ARE AND SHALL REMAIN THE PROPERTY OF ENCOMPASS ENGINEERING & SURVEYING.

TUSSO ENERGY, LLC
TYPHA SITE
TESC, GRADING, AND DRAINAGE PLAN

Encompass ENGINEERING & SURVEYING
Western Washington Division
165 NE Juniper Street, Suite 201 ■ Issaquah, WA 98027 ■ Phone: (425) 392-0250 ■ Fax: (425) 391-3055
407 Swiftwater Blvd. ■ Cle Elum, WA 98922 ■ Phone: (509) 674-7433 ■ Fax: (509) 674-7419
Eastern Washington Division

JOB NO.	17019
DATE	Sept. 27 2017
SCALE	AS SHOWN
DESIGNED	SF
DRAWN	SF
CHECKED	TML
APPROVED	TML
SHEET	C2.0

TUUSSO ENERGY - TYPHA SITE

A PORTION OF THE EAST 1/2 OF THE NE 1/4 OF SECTION 30, T. 18 N., R. 18 E., W.M.

KITTITAS COUNTY, STATE OF WASHINGTON

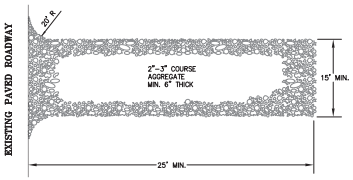

NOTES:
1. THE ENTRANCE SHALL BE MAINTAINED IN A CONDITION THAT WILL PREVENT TRACKING OR FLOWING OF SEDIMENT ONTO PUBLIC RIGHTS-OF-WAY. THIS MAY REQUIRE TOP DRESSING, REPAIR AND/OR CLEANOUT OF ANY MEASURES USED TO TRAP SEDIMENT.
2. WHEN NECESSARY, WHEELS SHALL BE CLEANED PRIOR TO ENTRANCE ONTO PUBLIC RIGHT-OF-WAY.
3. WHEN WASHING IS REQUIRED, IT SHALL BE DONE ON AN AREA STABILIZED WITH CRUSHED STONE THAT DRAINS INTO AN APPROVED SEDIMENT TRAP OR SEDIMENT BASIN.

ROCK CONSTRUCTION ENTRANCE

N.T.S.

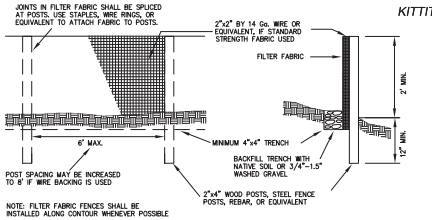

SILT FENCE DETAIL

N.T.S.

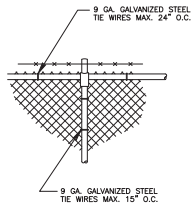

STEEL TIE WIRES

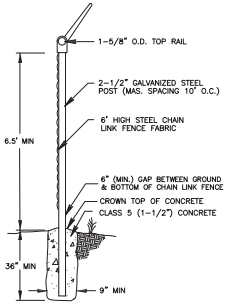

TYPICAL FENCE SECTION

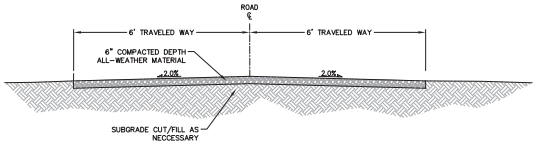

TYPICAL ALL-WEATHER ACCESS ROAD SECTION

N.T.S.

POST AND RAIL SPECIFICATIONS			
POST	PIPE	ROLL FORMED	
	NOM. SIZE (SCH. 40) I.D.	SECTION	WEIGHT (lb/ft)
END, CORNER, OR PULL POST	2 1/2" DIAM.	Y	5.10
LINE OR BRACE POST	2" DIAM.	Z	1.85

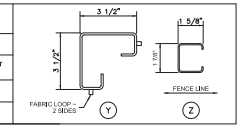

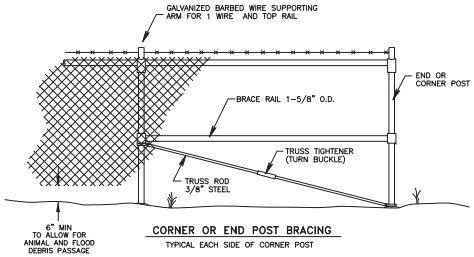

CORNER OR END POST BRACING

TYPICAL EACH SIDE OF CORNER POST

CHAIN LINK FENCE DETAIL

N.T.S.

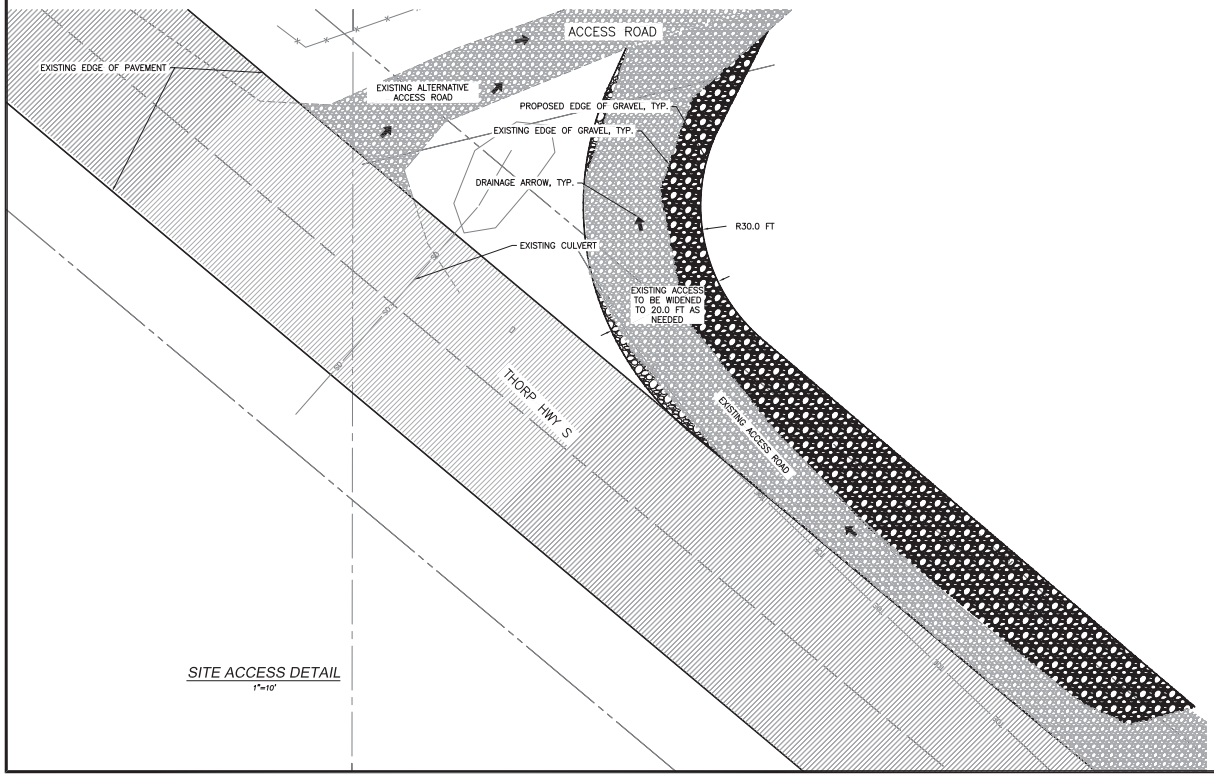

SITE ACCESS DETAIL

1"=10'

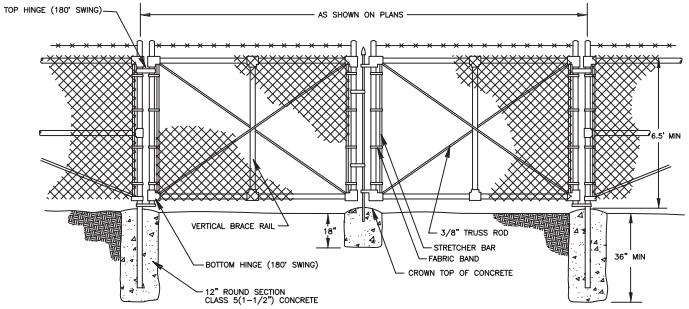

CHAIN LINK FENCE GATE DETAIL

N.T.S.

REVISIONS

DESCRIPTION	BY	DATE

© THE PLANS SET FORTH ON THIS SHEET ARE AND SHALL REMAIN THE PROPERTY OF ENCOMPASS ENGINEERING & SURVEYING.

TUUSSO ENERGY, LLC

TYPHA SITE

TESC DETAILS

Encompass
ENGINEERING & SURVEYING
165 NE Juniper Street, Suite 201 ▪ Issaquah, WA 98027 ▪ Phone: (425) 392-0250 ▪ Fax: (425) 391-3055
Western Washington Division
407 Sunflower Blvd ▪ Cle Elum, WA 98922 ▪ Phone: (509) 674-7433 ▪ Fax: (509) 674-7419
Eastern Washington Division

JOB NO.	17019
DATE	Sept. 27 2017
SCALE	AS SHOWN
DESIGNED	SF
DRAWN	SF
CHECKED	TML
APPROVED	TML
SHEET	C2.1

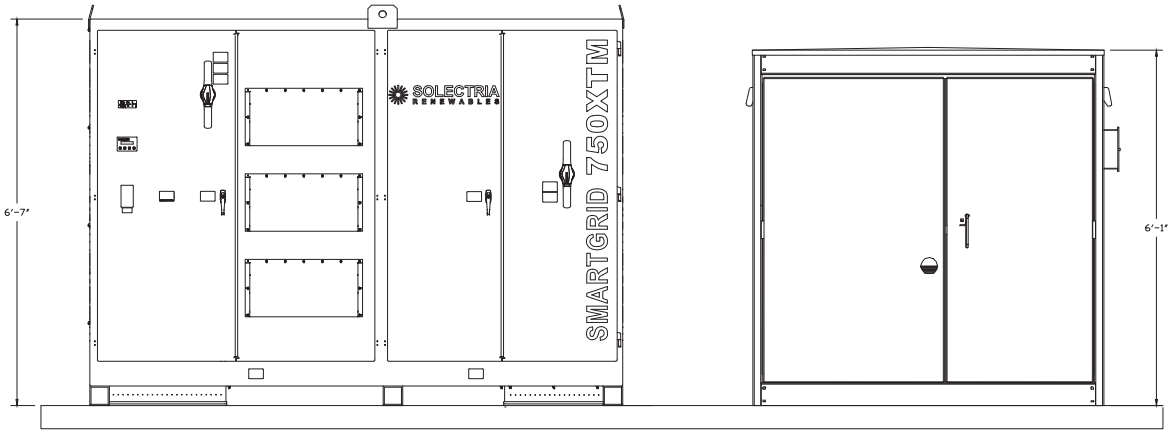

A 1500 kVA BLOCK ELEVATION
SCALE: 1"=1'

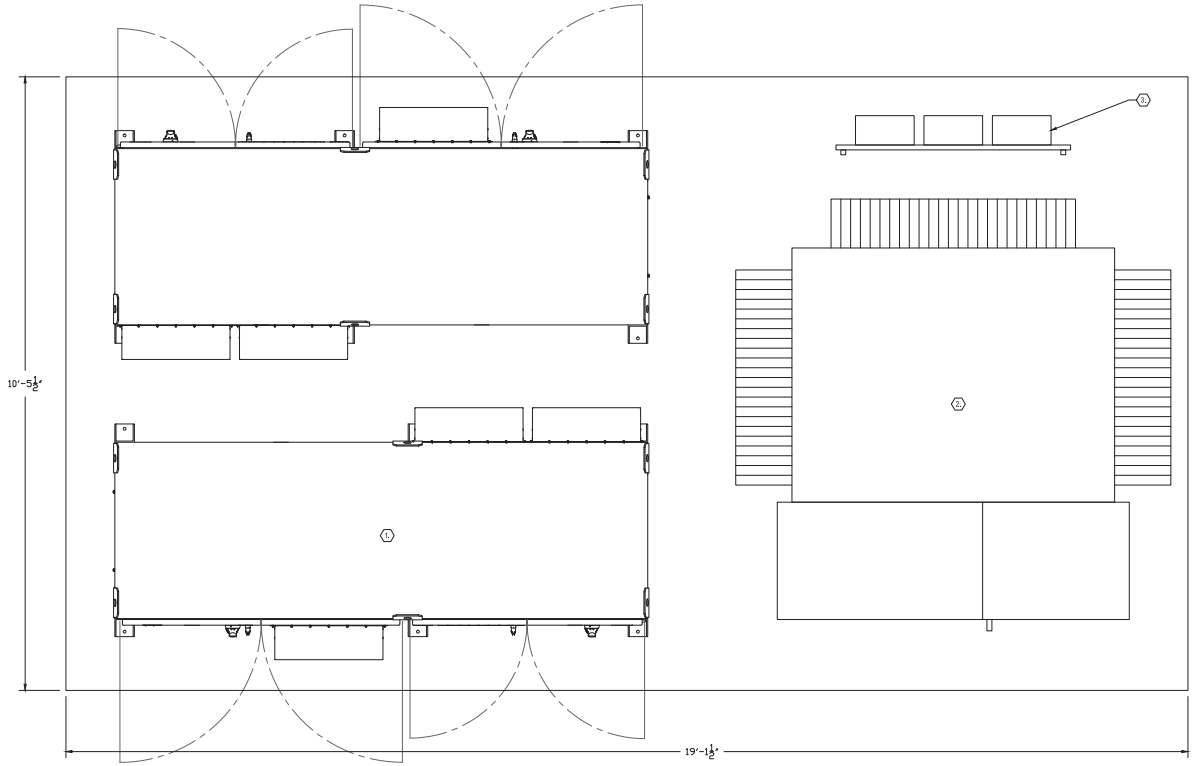

B 1500 kVA BLOCK LAYOUT
SCALE: 1"=1'

THE INFORMATION CONTAINED IN THESE DRAWINGS ARE CONFIDENTIAL AND ARE INTENDED FOR THE DESCRIBED PROJECT ONLY.

NOTES:

1. NONE.

KEYED NOTES:

1. SOLECTRIA SGI 750KVA INVERTER
2. 1500KVA 15KV TRANSFORMER
3. COMMUNICATION RACK

TUUSSO ENERGY

MaxPV ENGINEERING DEVELOPMENT
3131 POLYGON // SACRAMENTO, CA
WWW.MAXPVENGINEERING.COM

REV. NO.	DATE	DESCRIPTION	BY	CHK.	APR.
A	08-09-17	FOR PLAN REVIEW	LB	–	–

OWNER: TUUSSO ENERGY

PROJECT SITE: TYPHA SOLAR PROJECT

DRAWING: EQUIPMENT PAD DETAILS

DRAWING NO. E-401

THIS PRINT IS NOT TO BE USED FOR CONSTRUCTION UNLESS NOTED AND SIGNED OK FOR CONSTRUCTION ABOVE LAST REVISION.

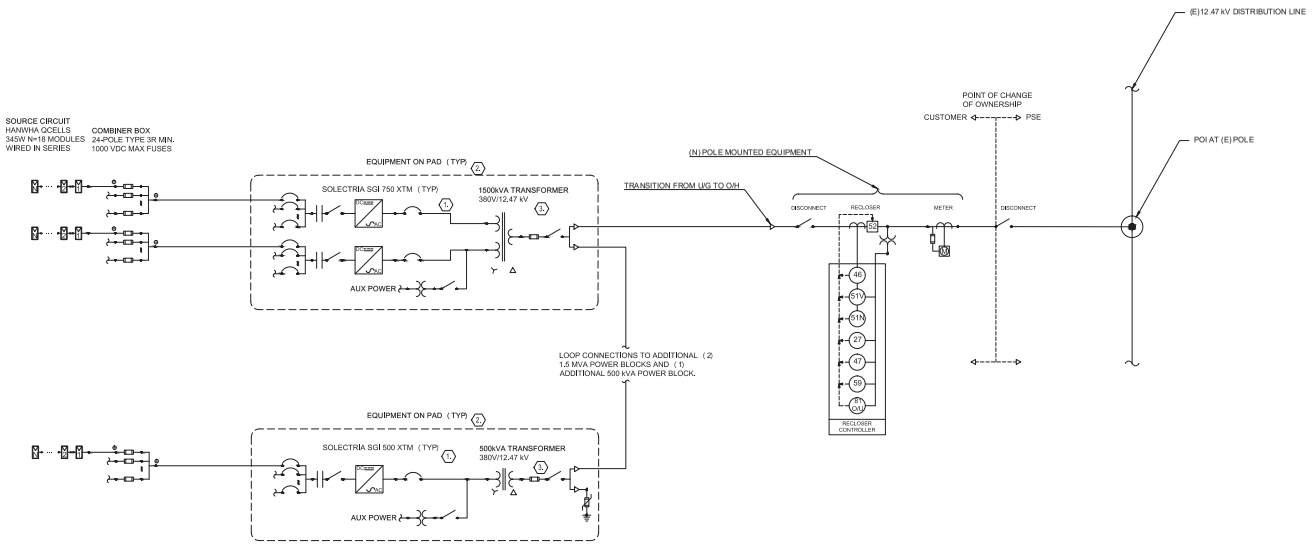

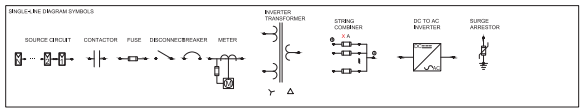

THE INFORMATION CONTAINED IN THESE DRAWINGS ARE CONFIDENTIAL AND ARE INTENDED FOR THE DESCRIBED PROJECT ONLY.

NOTES:

1. NONE.

KEYED NOTES:

1. **PV POWER CONDITIONING SYSTEM:** IEEE 929 AND IEEE 1547 COMPLIANT- 1000VDC MAX INPUT VOLTAGE. INVERTER EQUIPPED WITH INTEGRATED DC CIRCUIT BREAKER COMBINER.
2. EQUIPMENT PAD WITH INVERTER(S), STEP UP TRANSFORMER, AND COMMUNICATION EQUIPMENT.
3. TRANSFORMER SPECIFICATIONS TBD. VERIFY WITH INVERTER MFR & PSE FOR FINAL TRANFORMER CONFIGURATION.

TUUSSO ENERGY

MaxPV ENGINEERING DEVELOPMENT
3131 POLYGON // SACRAMENTO, CA
WWW.MAXPVENGINEERING.COM

REV. NO.	DATE	DESCRIPTION	BY	CHK.	APR.
A	08-09-17	FOR PLAN REVIEW	LB	–	–

OWNER: TUUSSO ENERGY

PROJECT SITE: TYPHA SOLAR PROJECT

DRAWING: SINGLE LINE DIAGRAM

DRAWING NO. E-601

THIS PRINT IS NOT TO BE USED FOR CONSTRUCTION UNLESS NOTED AND SIGNED OK FOR CONSTRUCTION ABOVE LAST REVISION.

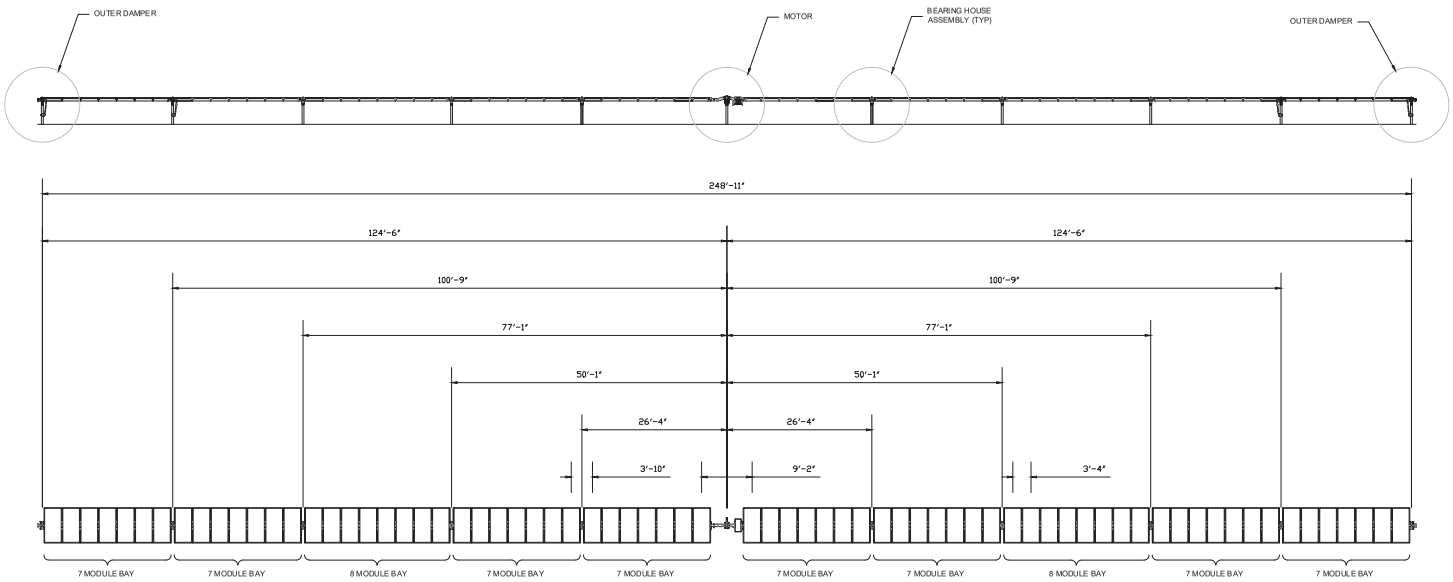

A 72 MODULE TRACKER

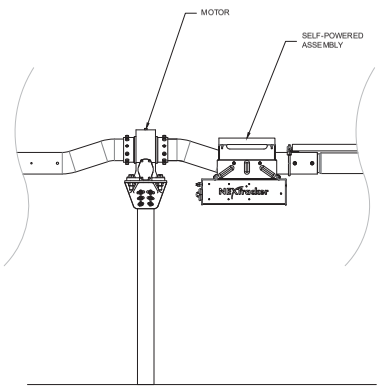

B MOTOR PILE DETAIL

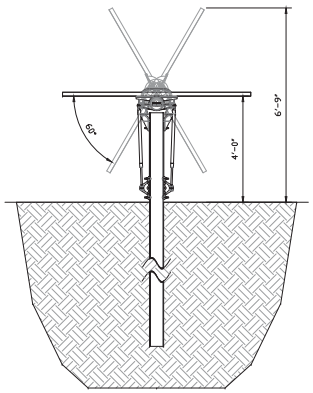

C TRACKER PROFILE

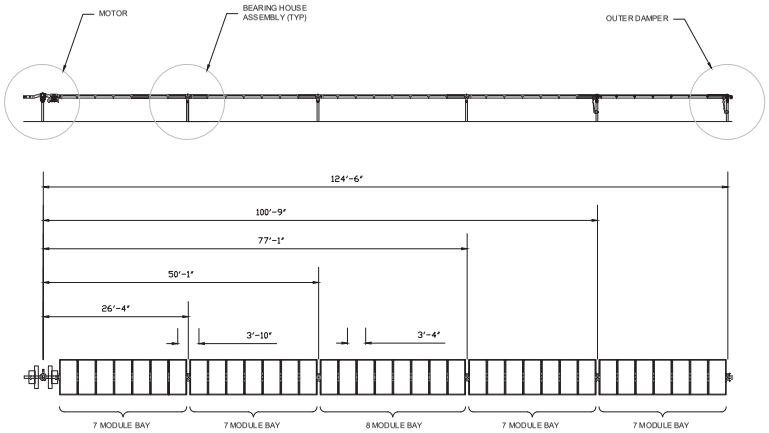

D 36 MODULE TRACKER

NOTES:

1. NONE.

KEYED NOTES:

1. NONE.

TUUSSO ENERGY

MaxPV ENGINEERING DEVELOPMENT
3131 POLYGON // SACRAMENTO, CA
WWW.MAXPVENGINEERING.COM

REV. NO.	DATE	DESCRIPTION	BY	CHK.	APR.
A	08-09-17	FOR PLAN REVIEW	LB	–	–

OWNER: TUUSSO ENERGY

PROJECT SITE: TYPHA SOLAR PROJECT

DRAWING: TRACKER ELEVATIONS

DRAWING NO. E-701

THIS PRINT IS NOT TO BE USED FOR CONSTRUCTION UNLESS NOTED AND SIGNED OK FOR CONSTRUCTION ABOVE LAST REVISION.

THE INFORMATION CONTAINED IN THESE DRAWINGS ARE CONFIDENTIAL AND ARE INTENDED FOR THE DESCRIBED PROJECT ONLY.

The Q.ANTUM solar module Q.PLUS L-G4.2 with power classes up to 345 Wp is the strongest module of its type on the market globally. Powered by 72 Q CELLS solar cells Q.PLUS L-G4.2 was specially designed for large solar power plants to reduce BOS costs. Only Q CELLS offers German engineering quality with our unique triple Yield Security.

LOW ELECTRICITY GENERATION COSTS
Higher yield per surface area and lower BOS costs thanks to higher power classes and an efficiency rate of up to 17.6 %.

INNOVATIVE ALL-WEATHER TECHNOLOGY
Optimal yields, whatever the weather with excellent low-light and temperature behavior.

ENDURING HIGH PERFORMANCE
Long-term yield security with Anti-PID Technology[1], Hot-Spot-Protect and Traceable Quality Tra.Q™.

EXTREME WEATHER RATING
High-tech aluminum alloy frame, certified for high snow (5400 Pa) and wind loads (2400 Pa).

A RELIABLE INVESTMENT
Inclusive 12-year product warranty and 25-year linear performance guarantee[2].

THE IDEAL SOLUTION FOR:

Engineered in Germany

Q CELLS

Our most amazing tracker yet.

In our mission to make solar a mainstream energy source, NEXTracker has engineered the most intelligent and flexible tracking technology yet. Using sustainable design methods with outcomes that benefit people and the planet, we bring you: NX Horizon®.

NX Horizon (formerly referred to as the Self-Powered Tracker or SPT), brings self-contained motor power to each row, eliminating power wiring and trenching. Our advanced horizontal tracker has the widest rotational range available, lowest O&M costs, and requires far less power to operate than other trackers. By offering more powerful systems at a greater value, NEXTracker enables greater deployment of renewable energy worldwide.

NX Horizon key features and benefits include:

– Self-powered system with smart performance communications: Self-contained units on each row include a dedicated PV panel to provide power to the controller which drives the motor and hosts intelligent control electronics to position each tracker. With smart communications built in, NX Horizon systems can be accessed remotely, providing customers with a granular view to optimize tracker performance, operations and maintenance.

– Independent balanced rows with 120 degree rotational range: Each NX Horizon row has its own controlled motor with rotational range that delivers up to 2% more energy than typical linked row trackers. These agile, independent rows slow in less than 90 seconds to reduce wind forces on the array, protecting the PV modules in harsh environments. NX Horizon solar trackers also have a mechanically balanced row design that align PV panels with the tracker's axis of rotation – which greatly reduces row torque, using less energy from the motor to track throughout the day.

– Self-grounded system with theft-proof fasteners: NX Horizon is the world's first horizontal tracker with an entirely self-grounded design. This means no separate bonding hardware is required. You save on material and associated costs by eliminating grounding washers, braided straps, bare copper wire, and grounding rods. What's more, we've designed our own fasteners that can only be removed with special tools – deterring PV theft.

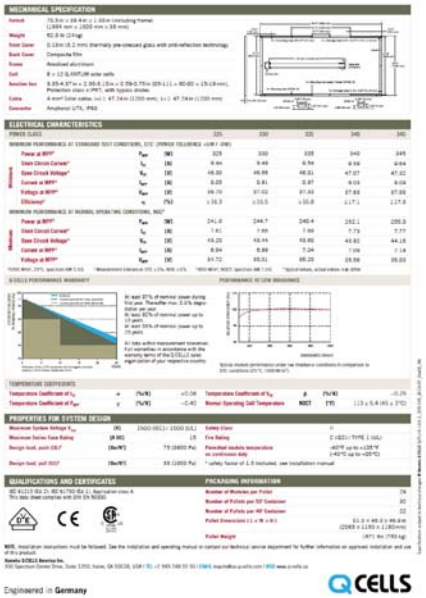

NX Horizon Specifications

Tracking Technology	Horizontal single-axis balanced mass tracker with independently driven rows
Tracking Range	Up to 120° (±60°)
Control System	1 Self-Powered Controller (SPC) per tracker; 1 Network Control Unit (NCU) per 100 SPCs
Communications	Wireless ZigBee® mesh network/SCADA; no communication wiring required
Drive System	One slew gear, 24 VDC motor and self-powered controller w/dedicated solar panel per row
DC Capacity	23.35kWp per tracker row, depending on panel type. Row length up to 90 panels.
System Voltage	1500 volt or 1500 volt
Power Consumption	No grid power required
Ground Coverage Ratio	Fully configurable by customer; typical range 33%-50%
Installation Method	Rapid field assembly, no welding required
Foundation Types	Compatible with all major foundation types (driven pier, concrete foundation, ground screw)
Standard Wind Design	100 mph/161 kph, 3 second gust per ASCE7-10; configurable for higher wind speeds
Safety Stowing	Automated wind and snow stowing with self-contained backup power; no external power required
Torsional Limiter	Included at each foundation/bearing for additional wind and snow load protection
Principal Materials	Galvanized and stainless steel
Grounding Method	Self-grounding structure; separate materials and labor not required
Compliance	Grounding/bonding: UL2703; structural design: ASCE7-10
Other Available Options	Snow and flood sensors
Warranty	10-years on structural components; 5-years on drive and control systems
Typical Dimensions	Height 2.1 m/6.8 ft @ 60°, Width 2.0 m/6.4 ft, Length 85 m/283 ft

Typical 72-cell c-Si configuration: 85 m row with 80 panels mounted in portrait:

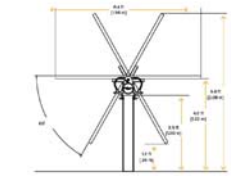

NEXTracker
6200 Paseo Padre Parkway
Fremont, CA 94555 USA
+1 510 270 2500
nextracker.com

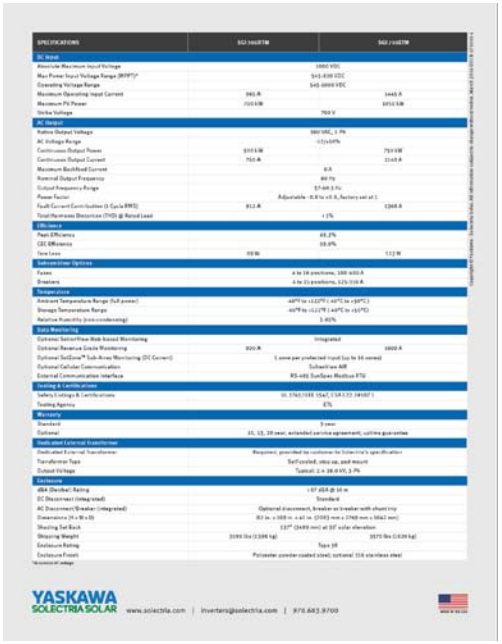

TUUSSO ENERGY

MaxPV ENGINEERING DEVELOPMENT
505 POLVOSO // SACRAMENTO, CA
WWW.MAXPVENGINEERING.COM

REV. NO.	DATE	DESCRIPTION	BY	CHK.	APR.
A	08-09-17	FOR PLAN REVIEW	LB	–	–

OWNER: TUUSSO ENERGY

PROJECT SITE: TYPHA SOLAR PROJECT

DRAWING: MAJOR EQUIPMENT SPECIFICATIONS

DRAWING NO. E-901

THIS PRINT IS NOT TO BE USED FOR CONSTRUCTION UNLESS NOTED AND SIGNED OK FOR CONSTRUCTION ABOVE LAST REVISION.

THE INFORMATION CONTAINED IN THESE DRAWINGS ARE CONFIDENTIAL AND ARE INTENDED FOR THE DESCRIBED PROJECT ONLY.

TUUSSO ENERGY - URTICA SITE

A PORTION OF THE SW 1/4 SECTION 10, T. 17 N., R. 18 E., W.M.
KITTATAS COUNTY, STATE OF WASHINGTON

NORTH

05 25 50 100

SCALE 1" = 100'

811

Know what's **below.**
Call before you dig.

INDEX LOCATION
SEC. 10 T. 17 N.R. 18 E.W.M.

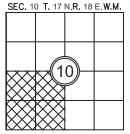

NOTES:

1. ALL CONSTRUCTION TECHNIQUES AND MATERIALS SHALL BE IN ACCORDANCE WITH THE CURRENT STATE OR COUNTY STANDARDS (AS APPLICABLE) AND AS SHOWN IN THESE PLANS.
2. BOUNDARY AND TOPOGRAPHIC SURVEY SHOWN HEREON WAS PREPARED BY ENCOMPASS ENGINEERING AND SURVEYING IN MAY 2017 UNDER DIRECT SUPERVISION OF DUSTIN PIERCE, PLS #45503.

PROPERTY INFORMATION:

APPLICANT:	TUUSSO ENERGY, LLC 500 YALE AVE N SEATTLE, WA 98109
PARCEL NUMBERS:	808533, 869436, 879436, 889436, 950243, 950244, 950245, 950246, 950247, 950248
PARCEL SIZE:	98.17 ACRES
TRACT 1A SIZE:	51.49 ACRES
TRACT 2A SIZE:	46.68 ACRES (NOT LEASED)
PROPERTY ADDRESS:	TBD, ELLENSBURG, WA 98926
ZONE:	AGRICULTURAL
IRRIGATION DISTRICT:	WEST SIDE

SHEET INDEX:

TITLE	NO.
COVER SHEET & OVERALL SITE PLAN	C1.0
NOTES, LEGEND & ABBREVIATIONS	C1.1
TESC, GRADING, AND DRAINAGE PLAN	C2.0
TESC DETAILS AND STANDARD DETAILS	C2.1

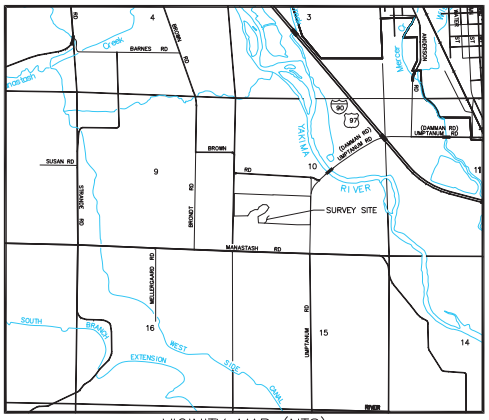

VICINITY MAP (NTS)

REVISIONS

DESCRIPTION	BY	DATE

© THE PLANS SET FORTH ON THIS SHEET ARE AND SHALL REMAIN THE PROPERTY OF ENCOMPASS ENGINEERING & SURVEYING.

TUUSSO ENERGY, LLC
URTICA SITE
COVER SHEET & OVERALL SITE PLAN

Encompass ENGINEERING & SURVEYING
165 NE Juniper Street, Suite 201 • Issaquah, WA 98027 • Phone: (425) 392-0250 • Fax: (425) 391-3055
Western Washington Division
407 Southwater Blvd. • Cle Elum, WA 98922 • Phone: (509) 674-7433 • Fax: (509) 674-7419
Eastern Washington Division

JOB NO.	17018
DATE	Sept. 27 2017
SCALE	AS SHOWN
DESIGNED	SF
DRAWN	SF
CHECKED	TML
APPROVED	TML
SHEET	C1.0

STANDARD PLAN NOTES:

1. ALL CONSTRUCTION TECHNIQUES AND MATERIALS SHALL BE IN ACCORDANCE WITH THE CURRENT STATE OR COUNTY STANDARDS AND AS SHOWN IN THESE PLANS.
2. A COPY OF THE APPROVED PLANS MUST BE ON SITE WHENEVER CONSTRUCTION IS IN PROGRESS.
3. THE CONTRACTOR SHALL OBTAIN ALL PERMITS REQUIRED FOR WORK THAT ARE NOT PROVIDED BY THE OWNER PRIOR TO START OF CONSTRUCTION.
4. PAVED OR SIMILAR ESTABLISHED SURFACES INCLUDING ROADWAYS, SIDEWALKS AND CURBS THAT ARE TO REMAIN BUT ARE DAMAGED BY NEW CONSTRUCTION SHALL BE REPAIRED AS REQUIRED BY THE INSPECTOR.
5. ALL SURVEYING AND STAKING OF IMPROVEMENTS SHALL BE APPROVED BY THE OWNER. CONTRACTOR SHALL COORDINATE AND VERIFY WITH THE OWNER PRIOR TO OBTAINING STAKING SERVICES.
6. THE CONTRACTOR SHALL NOTIFY THE KITTITAS COUNTY FIRE DISTRICT (509-386-1495) TWENTY-FOUR (24) HOURS IN ADVANCE OF ALL WATER SERVICE INTERRUPTIONS, HYDRANT SHUT-OFFS, AND STREET CLOSURES OR OTHER ACCESS BLOCKAGE. THE CONTRACTOR SHALL ALSO NOTIFY THE DISTRICT OF ALL NEW, RELOCATED, OR ELIMINATED HYDRANTS RESULTING FROM THIS WORK.
7. ALL LOCATIONS OF EXISTING UTILITIES SHOWN HEREON HAVE BEEN ESTABLISHED BY FIELD SURVEY OR OBTAINED FROM AVAILABLE RECORDS AND SHOULD THEREFORE BE CONSIDERED APPROXIMATE ONLY AND NOT NECESSARILY COMPLETE. IT IS THE SOLE RESPONSIBILITY OF THE CONTRACTOR TO INDEPENDENTLY VERIFY THE ACCURACY OF ALL UTILITY LOCATIONS SHOWN AND TO FURTHER DISCOVER AND AVOID ANY OTHER UTILITIES NOT SHOWN HEREON WHICH MAY BE AFFECTED BY THE IMPLEMENTATION OF THIS PLAN.
8. THE CONTRACTOR SHALL LOCATE AND PROTECT ALL ACTIVE CASTINGS AND UTILITIES DURING CONSTRUCTION AND SHALL CONTACT THE UNDERGROUND UTILITIES LOCATOR SERVICE (1-800-424-5555 OR 811) AT LEAST 48 HOURS PRIOR TO CONSTRUCTION.
9. THE CONTRACTOR SHALL ADJUST ALL EXISTING MANHOLE RIMS, DRAINAGE STRUCTURE LIDS, VALVE BOXES AND UTILITY ACCESS STRUCTURES TO FINISH GRADE WITHIN AREAS AFFECTED BY THE PROPOSED IMPROVEMENTS.
10. THE CONTRACTOR SHALL PROVIDE FOR ALL COMPACTION TESTS REQUIRED BY THE INSPECTOR.
11. BACKFILL MATERIAL SHALL MEET STATE OR COUNTY STANDARDS.
12. INSPECTION AND ACCEPTANCE OF ALL WORK WILL BE ACCOMPLISHED BY THE DESIGNATED INSPECTOR. IT SHALL BE THE CONTRACTOR'S RESPONSIBILITY TO COORDINATE AND SCHEDULE APPROPRIATE INSPECTIONS, ALLOWING PROPER ADVANCE NOTICE. THE INSPECTOR MAY REQUIRE RECONSTRUCTION OF ITEMS THAT DO NOT MEET THE CONTRACT DOCUMENTS OR THAT WERE CONSTRUCTED WITHOUT INSPECTION.
13. THE CONTRACTOR SHALL PROVIDE AND MAINTAIN BEST MANAGEMENT PRACTICES AS SHOWN HEREIN TO INSURE THAT SEDIMENT-LADEN WATER DOES NOT ENTER THE WATER OF THE STATE. AS CONSTRUCTION PROGRESSES AND UNEXPECTED (SEASONAL) CONDITIONS DICTATE, ADDITIONAL BEST MANAGEMENT PRACTICES MAY BE REQUIRED. THEREFORE, DURING THE COURSE OF CONSTRUCTION IT SHALL BE THE OBLIGATION AND RESPONSIBILITY OF THE CONTRACTOR TO ADDRESS ANY NEW CONDITIONS THAT MAY BE CREATED BY HIS ACTIVITIES AND TO PROVIDE ADDITIONAL FACILITIES THAT MAY BE NEEDED TO PROTECT ADJACENT PROPERTIES.
14. THE CONTRACTOR SHALL KEEP ALL STREETS AND PUBLIC RIGHT-OF-WAY CLEAN AT ALL TIMES BY SWEEPING.
15. CONTRACTOR SHALL PROVIDE TRAFFIC CONTROL AS NECESSARY THROUGHOUT THE PROJECT. TRAFFIC CONTROL SHALL BE IN ACCORDANCE WITH THE MUTCD, STATE, AND/OR COUNTY STANDARDS.
16. CONTRACTOR SHALL NOT MAKE ANY REVISIONS IN THE FIELD WITHOUT PRIOR WRITTEN APPROVAL BY THE ENGINEER.
17. THE CONTRACTOR SHALL BE RESPONSIBLE FOR PROVIDING ADEQUATE SAFEGUARDS, SAFETY DEVICES, PROTECTIVE EQUIPMENT, FLAGGERS, AND ANY OTHER NEEDED ACTIONS TO PROTECT THE LIFE, HEALTH, AND SAFETY OF THE PUBLIC, AND TO PROTECT PROPERTY IN CONNECTION WITH THE PERFORMANCE OF WORK COVERED BY THE CONTRACTOR. ANY WORK WITHIN THE TRAVELED RIGHT-OF-WAY THAT MAY INTERRUPT NORMAL TRAFFIC FLOW SHALL REQUIRE AT LEAST ONE FLAGGER FOR EACH LANE OF TRAFFIC AFFECTED. ALL SECTIONS OF THE WSDOT STANDARD SPECIFICATIONS 1-07.23 - TRAFFIC CONTROL, SHALL APPLY.
18. ANY TRENCH DEEPER THAN 5 FEET WILL REQUIRE SHORING FOR TRENCH WALL STABILIZATION.

GENERAL TESC NOTES:

1. APPROVAL OF THIS TEMPORARY EROSION AND SEDIMENTATION CONTROL (TESC) PLAN DOES NOT CONSTITUTE AN APPROVAL OF PERMANENT ROAD OR DRAINAGE DESIGN (E.G. SIZE AND LOCATION OF ROADS, PIPES, RESTRICTORS, CHANNELS, RETENTION FACILITIES, UTILITIES, ETC.).
2. THE IMPLEMENTATION OF THESE TESC PLANS AND THE CONSTRUCTION, MAINTENANCE, REPLACEMENT, AND UPGRADING OF THESE TESC FACILITIES IS THE RESPONSIBILITY OF THE APPLICANT OR A TESC SUPERVISOR UNTIL ALL CONSTRUCTION IS APPROVED.
3. THE BOUNDARIES OF THE CLEARING LIMITS SHOWN ON THIS PLAN SHALL BE CLEARLY FLAGGED BY A CONTINUOUS LENGTH OF SURVEY TAPE (OR FENCING, IF REQUIRED) PRIOR TO CONSTRUCTION. DURING THE CONSTRUCTION PERIOD, NO DISTURBANCE BEYOND THE CLEARING LIMITS SHALL BE PERMITTED. THE CLEARING LIMITS SHALL BE MAINTAINED BY THE APPLICANT/TESC SUPERVISOR FOR THE DURATION OF CONSTRUCTION.
4. THE TESC FACILITIES SHOWN ON THIS PLAN MUST BE CONSTRUCTED PRIOR TO OR IN CONJUNCTION WITH ALL CLEARING AND GRADING SO AS TO ENSURE THAT THE TRANSPORT OF SEDIMENT TO SURFACE WATERS, DRAINAGE SYSTEMS, AND ADJACENT PROPERTIES IS MINIMIZED.
5. THE TESC FACILITIES SHOWN ON THIS PLAN ARE THE MINIMUM REQUIREMENTS FOR ANTICIPATED SITE CONDITIONS. DURING THE CONSTRUCTION PERIOD, THESE TESC FACILITIES SHALL BE UPGRADED AS NEEDED FOR UNEXPECTED STORM EVENTS AND MODIFIED TO ACCOUNT FOR CHANGING SITE CONDITIONS (E.G. ADDITIONAL SUMP PUMPS, RELOCATION OF DITCHES AND SILT FENCES, ETC.).
6. ANY AREAS OF EXPOSED SOILS, INCLUDING ROADWAY EMBANKMENTS, THAT WILL NOT BE DISTURBED FOR TEN DAYS DURING THE WET SEASON OR FOURTEEN DAYS DURING THE DRY SEASON SHALL BE IMMEDIATELY STABILIZED WITH THE APPROVED TESC METHODS (E.G., SEEDING, MULCHING, PLASTIC COVERING, ETC.).
7. ANY AREA NEEDING TESC MEASURES, NOT REQUIRING IMMEDIATE ATTENTION, SHALL BE ADDRESSED WITHIN FIFTEEN (15) DAYS.
8. THE TESC FACILITIES ON INACTIVE SITES SHALL BE INSPECTED AND MAINTAINED A MINIMUM OF ONCE A MONTH OR WITHIN 48 HOURS FOLLOWING A STORM EVENT.
9. AT NO TIME SHALL MORE THAN ONE (1) FOOT OF SEDIMENT BE ALLOWED TO ACCUMULATE WITHIN A CATCH BASIN. ALL CATCH BASINS AND CONVEYANCE LINES SHALL BE CLEANED PRIOR TO PAVING. THE CLEANING OPERATION SHALL NOT FLUSH SEDIMENT-LADEN WATER INTO THE DOWNSTREAM SYSTEM.
10. STABILIZED CONSTRUCTION ENTRANCES AND ROADS SHALL BE INSTALLED AT THE BEGINNING OF CONSTRUCTION AND MAINTAINED FOR THE DURATION OF THE PROJECT. ADDITIONAL MEASURES, SUCH AS WASH PADS, MAY BE REQUIRED TO ENSURE THAT ALL PAVED AREAS ARE KEPT CLEAN FOR THE DURATION OF THE PROJECT.
11. ANY PERMANENT RETENTION/DETENTION FACILITY USED AS A TEMPORARY SETTLING BASIN SHALL BE MODIFIED WITH THE NECESSARY EROSION CONTROL MEASURES AND SHALL PROVIDE ADEQUATE STORAGE CAPACITY. IF THE PERMANENT FACILITY IS TO FUNCTION ULTIMATELY AS AN INFILTRATION SYSTEM, THE TEMPORARY FACILITY MUST BE GRADED SO THAT THE BOTTOM AND SIDES ARE AT LEAST ONE FOOT ABOVE THE FINAL GRADE OF THE PERMANENT FACILITY.
12. WHERE STRAW MULCH FOR TEMPORARY EROSION CONTROL IS REQUIRED, IT SHALL BE APPLIED AT A MINIMUM THICKNESS OF TWO INCHES

STANDARD GRADING NOTES:

1. ALL GRADING ACTIVITIES, INCLUDING EXCAVATION, BACKFILL AND COMPACTION, SHALL BE DONE IN ACCORDANCE WITH STATE OR COUNTY STANDARDS AS APPLICABLE.
2. WITHIN ANY AREAS TO RECEIVE STRUCTURAL FILL, PAVEMENTS OR HARDSCAPE, THE SUBGRADE SHALL BE SCARIFIED, MOISTURE CONDITIONED, AND COMPACTED TO AT LEAST 95% MAXIMUM DENSITY (ASTM D 1557).
3. CONTRACTOR SHALL OBTAIN AN APPROVAL BY THE GEOTECHNICAL ENGINEER PRIOR TO PROCEEDING WITH ANY OVEREXCAVATION. CONTRACTOR SHALL VERIFY THE AMOUNT OF OVEREXCAVATION WITH GEOTECHNICAL ENGINEER.
4. COMPACTION SHALL BE DONE PER STATE OR COUNTY STANDARDS AS APPLICABLE. SITE EXCAVATION AND/OR SUBGRADE PREPARATION SHALL BE COMPLETED BEFORE PLACING STRUCTURAL FILL. COMPACTION SHALL BE VERIFIED BY DENSITY TESTING.
5. ALL TEMPORARY CUT SLOPES SHALL NOT EXCEED 1.5H:1V. ALL PERMANENT CUT SLOPES SHALL NOT EXCEED 2H:1V OR AS SHOWN ON PLANS. ALL PERMANENT FILL SLOPES SHALL NOT EXCEED 2H:1V.
6. CONTRACTOR SHALL IMPLEMENT APPROPRIATE PROTECTION AND TRAFFIC CONTROL DURING CONSTRUCTION TO DIRECT TRUCK TRAFFIC.
7. ANY AND ALL FILL MATERIAL PLACED ON THE LOT SHALL BE COMPACTED AND A COMPACTION INSPECTION REPORT FOR THE COMPACTION AND BEARING CAPACITY OF THAT FILL MATERIAL SHALL BE PROVIDED TO THE STATE OR COUNTY AS APPLICABLE WITHIN 60 DAYS OF THE PLACEMENT OF THE FILL MATERIAL.
8. ALL EXCESS SOIL SHALL BE OFF-HAULED TO A LEGAL DISPOSAL SITE. NO EXCESS SOIL SHALL BE SPREAD ON THE SITE WITHOUT CLEARLY BEING SHOWN ON THE APPROVED GRADING PLAN.
9. ALL CUT AND FILL SLOPES AND ALL EXPOSED DIRT SHALL BE PLANTED, WATERED AND MAINTAINED UNTIL EFFECTIVE EROSION CONTROL HAS BEEN ESTABLISHED TO THE SATISFACTION OF THE STATE OR COUNTY AS APPLICABLE.
10. CONTRACTOR SHALL PROVIDE HIS/HER OWN EARTHWORK CALCULATIONS FOR ALL CUT AND FILL OPERATIONS.

ABBREVIATIONS:

AC – ASPHALT CONCRETE
ACP – ABESTOS CEMENT PIPE
ADD'L – ADDITIONAL
AD – AREA DRAIN
ADJ – ADJACENT
ANSI – AMERCIAN NATIONAL STANDARDS INSTITUTE
ALT – ALTERNATE
ALUM – ALUMINUM
APPROX – APPROXIMATE(LY)
ARCH – ARCHITECT(URAL)
AP – ANGLE POINT
ASPH – ASPHALT
ASSY – ASSEMBLY
ASTM – AMERICAN SOCIETY OF TESTING AND MATERIALS
AVE – AVENUE
BC – BACK OF CURB
BF – BLIND FLANGE
BLDG – BUILDING
BLDG – BUILDING CORNER
BLK – BLOCK
BLVD – BOULEVARD
BM – BENCHMARK
BNDY – BOUNDARY
BO – BLOW OFF
BOW – BOTTOM OF WALL (AT FINISHED GRADE)
BSBL – BUILDING SETBACK LINE
BVC – BEGINNING OF VERTICAL CURVE
BVCE – BEGIN VERTICAL CURVE ELEVATION
BVCS – BEGIN VERTICAL CURVE STATION
BW – BACK OF WALK
CB – CATCH BASIN
CF – CUBIC FEET (FOOT)
CIP – CAST IRON PIPE
CJ – CONSTRUCTION JOINT
CL – CLASS
C/L – CENTER LINE
CLR – CLEARENCE
CMP – CORRUGATED METAL PIPE
CO – CLEAN OUT
CONN – CONNECTION
CONT – CONTINUOUS (CONTINUED)
CONTR – CONTRACTOR
C, CONC – CONCRETE
CONST – CONSTRUCTION
CP – CONTROL POINT
CFS – CUBIC FEET PER SECOND
CTR – CENTER(ED)
CTV – CABLE TV
C&G – CURB AND GUTTER
CY – CUBIC YARD
DCVA – DOUBLE CHECK VALVE ASSEMBLY
DDCV – DOUBLE DETECTOR CHECK VALVE
DEPT. – DEPARTMENT
DET – DETAIL OR DETENTION
DIP – DUCTLE IRON PIPE
DIA(S) – DIAMETER
DIM – DIMENSION
DOT – DEPARTMENT OF TRANSPORTATION
DS – DOWN SPOUT
DWG – DRAWING
E – EAST(ING)
EA – EACH
EL – ELEVATION
ELEC – ELECTRICAL
EP – EDGE OF PAVEMENT
EQUIV – EQUIVALENT
EVC – END OF VERTICAL CURVE
EVCE – END OF VERTICAL CURVE ELEVATION
EVCS – END OF VERTICAL CURVE STATION
EX, EXIST – EXISTING
FC – FACE OF CURB
FD – FLOOR DRAIN
FDC – FIRE DEPARTMENT CONNECTION
FFE – FINISH FLOOR ELEVATION
FH – FIRE HYDRANT
FL – FLANGED OR FLOW LINE
FLR – FLOOR
FS – FINSHED SURFACE
FT (') – FOOT (FEET)
FTG – FOOTING
G – GAS MAIN
GA – GAUGE
GALV – GALVANIZED
GB – GRADE BREAK
GM– GAS METER
GRD – GRADE
HB – HOSE BIBB
HDPE – HIGH DENSITY POLYETHYLENE
HORIZ (H) – HORIZONTAL
HT – HEIGHT
HYD – HYDRANT
ID – INSIDE DIAMETER
E – INVERT ELEVATION
IN (") – INCHES
INV – INVERT
IRR – IRRIGATION WATER
L – LENGTH
LB, # – POUND(S)
LF – LINEAR FEET
LN – LANE
MAT'L – MATERIAL
MAX – MAXIMUN
MFR – MANUFACTURER
MH – MANHOLE
MIN – MINIMUM
MISC – MISCELLANEOUS
MJ – MECHANICAL JOINT
N – NORTH(ING)
NO (#) – NUMBER
N.T.S. – NOT TO SCALE
O.C. – ON CENTER
O.D. – OUTSIDE DIAMETER
O/W – OIL WATER
P – POWER
PC – POINT OF CURVATURE
PERF – PERFORATED
PI – POINT OF INTERSECTION
PIV – POST INDICTOR VALVE
PL – PROPERTY LINE
PP – POWER POLE
PROV – PROVIDED
PSF – POUNDS PER SQUARE FOOT
PSI – POINDS PER SQUARE INCH
PT – POINT OF TANGENCY
PVC – POLYVINYL CHLORIDE
PVI – POINT OF VERTICAL INTERSECTION
PVMT – PAVEMENT
PVT – POINT OF VERTICAL TANGENT
QTY – QUANTITY
RAD (R) – RADIUS
RCP – REINFORCED CONCRETE PIPE
RD – ROAD
REF – REFERENCE
REINF – REINFORCED
REQ – REQUIRED
RET – RETAINING
ROW – RIGHT-OF-WAY
RR – RAILROAD
S – SOUTH
S, SL – SLOPE
SCH – SCHEDULE
SD – STORM DRAIN
SF – SQUARE FOOT
SHT – SHEET
SIM – SIMILAR
SPEC – SPECIFICATION(S)
SQ – SQUARE
SS – SANITARY SEWER
ST – STREET
STA – STATION
STD – STANDARD
STL – STEEL
T – TELEPHONE WIRE
TBM – TEMPORARY BENCH MARK
TC – TOP OF CURB
TEMP – TEMPORARY
TG/RIM – TOP OF GRATE/RIM
THRU – THROUGH
TOE – TOE OF WALL OR SLOPE
TOP – TOP OF WALL OR SLOPE
TOW – TOP OF WALL
TYP – TYPICAL
VC – VERTICAL CURVE
VOL – VOLUME
W – WEST
W/ – WITH
WM – WATER METER
W/O – WITHOUT
WQ – WATER QUALITY
WT – WEIGHT
WWF – WELDED WIRE FABRIC
WV – WATER VALVE
YD – YARD DRAIN

LEGEND

	EXISTING:	PROPOSED:
BOUNDARY LINE/RIGHT-OF-WAY		
LOT LINE		
STREET MONUMENT (IN CONCRETE)		
PROPERTY CORNER		
BENCHMARK/CONTROL POINT		
TEMPORARY BENCHMARK	TBM	TBM
EASEMENT LINE		
CENTERLINE		
CURB/GUTTER/SIDEWALK LINE		
EDGE OF PAVEMENT LINE		
CHAIN LINK FENCE LINE		
SIGN		
STREET LIGHT (ELECTROLIER)		
GRADE BREAK LINE		
CONTOUR LINE (MAJOR)	1650	1650
CONTOUR LINE (MINOR)	1651	1651
CATCH BASIN (TYPE 1)		
STORM DRAIN MANHOLE/CATCH BASIN TYPE 2		
STORM DRAIN LINE	SD	
CONTROL STRUCTURE		
RIP-RAP PAD		
SANITARY SEWER LINE	SS	
SANITARY SEWER CLEANOUT		
SANITARY SEWER MANHOLE		
WATERMAIN LINE	W	
GATE VALVE (MECHANICAL JOINT)		
GATE VALVE (FLANGE)		
WATER METER		
FIRE HYDRANT		
CAP		
GAS LINE	G	G
GAS VALVE		
UNDERGROUND ELECTRIC LINE	E	E
POWER POLE / UTILITY POLE		
GUY ANCHOR		
ELECTRICAL TRANSFORMER / VAULT	P	P
TELEPHONE VAULT/PEDESTAL	T	T
TELEPHONE MANHOLE	T	T
100 YR FLOODPLAIN HATCH		
CONCRETE HATCH		
GRAVEL HATCH		
ALL WEATHER ROAD HATCH (COMPACTED SOIL OR GRAVEL)		
PROPOSED LANDSCAPING STRIP		

CONTRACTOR RESPONSIBILITY:

CONTRACTOR AGREES THAT HE SHALL ASSUME SOLE AND COMPLETE RESPONSIBILITY FOR JOB SITE CONDITIONS, INCLUDING THE SAFETY OF ALL PERSONS AND PROPERTY, DURING THE COURSE OF CONSTRUCTION OF THIS PROJECT, AND THAT THIS REQUIREMENT SHALL APPLY CONTINUOUSLY AND NOT BE LIMITED TO NORMAL WORKING HOURS. THE CONTRACTOR SHALL DEFEND, INDEMNIFY AND HOLD THE OWNER AND THE ENGINEER HARMLESS FROM ANY AND ALL LIABILITY, REAL OR ALLEGED, IN CONNECTION WITH THE PERFORMANCE OF WORK ON THIS PROJECT, EXCEPTING FOR LIABILITY ARISING FROM THE SOLE NEGLIGENCE OF THE OWNER OR THE ENGINEER.

DISCREPANCIES:

IF THERE ARE ANY DISCREPANCIES BETWEEN DIMENSIONS IN DRAWINGS AND EXISTING CONDITIONS WHICH WILL AFFECT THE WORK, THE CONTRACTOR SHALL BRING SUCH DISCREPANCIES TO THE ATTENTION OF THE ENGINEER FOR ADJUSTMENT BEFORE PROCEEDING WITH THE WORK. THE CONTRACTOR SHALL BE RESPONSIBLE FOR THE PROPER FITTING OF ALL WORK AND FOR THE COORDINATION OF ALL TRADES, SUBCONTRACTORS, AND PERSONS ENGAGED UPON THIS CONTRACT.

REVISIONS		
DESCRIPTION	BY	DATE

© THE PLANS SET FORTH ON THIS SHEET ARE AND SHALL REMAIN THE PROPERTY OF ENCOMPASS ENGINEERING & SURVEYING.

TUUSSO ENERGY, LLC
URTICA SITE
NOTES, LEGEND & ABBREVIATIONS

Encompass ENGINEERING & SURVEYING
165 NE Juniper Street, Suite 201 • Issaquah, WA 98027 • (425) 392-0250 • Fax: (425) 391-3055
Western Washington Division
407 Southeast Blvd. • Cle Elum, WA 98922 • Phone: (509) 674-7433 • Fax: (509) 674-7419
Eastern Washington Division

JOB NO.	17018
DATE	Sept. 27 2017
SCALE	AS SHOWN
DESIGNED	SF
DRAWN	SF
CHECKED	TML
APPROVED	TML
SHEET	C1.1

TUUSSO ENERGY - URTICA SITE

A PORTION OF THE SW 1/4 SECTION 10, T. 17 N., R. 18 E., W.M.
KITTATAS COUNTY, STATE OF WASHINGTON

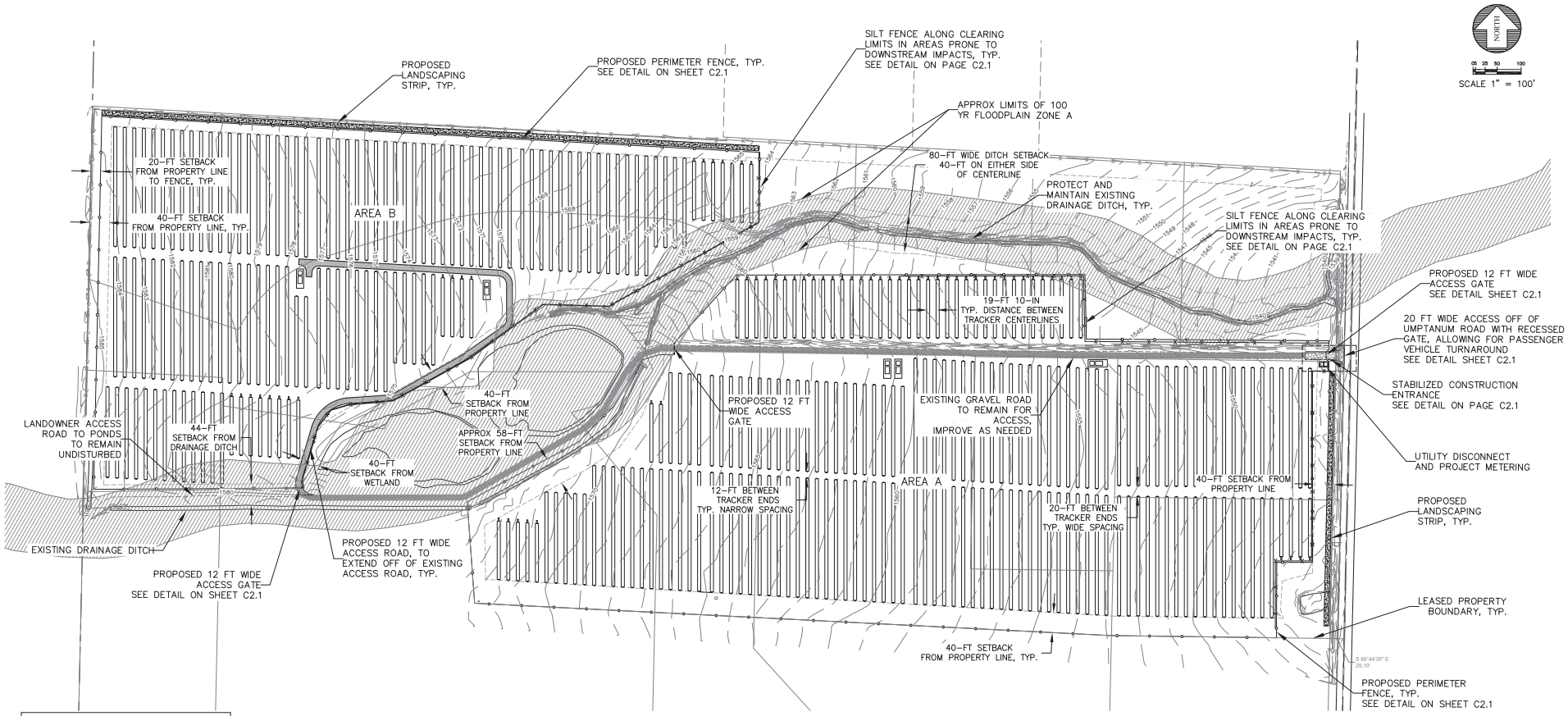

SYSTEM SUMMARY	
kWDC	6,706.8
kVAAC	5,000.0
INVERTER QTY.	6
MODULE QTY.	19,440
DC SYSTEM VOLTAGE (V)	1000
DC SYSTEM VOLTAGE (kV)	12.47
INVERTER AC RATING (KVA)	1000
PV MODULE MODEL #	QCELLS 345W
PV MODULE NAMEPLATE (W)	345
RACKING SYSTEM	NEXTRACKER
GROUND COVERATE RATIO	0.33
DC:AC RATIO	1.34
MODULE TILT	TRACKER, +/-60°
AREA A	
kWDC	3,962.0
kVAAC	3,000.0
DC:AC RATIO	1.32
MODULE QTY.	11,484.0
AREA B	
kWDC	2,744.8
kVAAC	2,000.0
DC:AC RATIO	1.37
MODULE QTY.	7,956.0

LEGEND

- INVERTER STATION
- 72 MODULE TRACKER
- 54 MODULE TRACKER
- 36 MODULE TRACKER

SHEET NOTES:

1. REFER TO STANDARD PLAN NOTES ON SHEET C1.1.
2. ALL CONSTRUCTION SHALL BE IN ACCORDANCE WITH STATE OR COUNTY STANDARDS AS APPLICABLE. IT SHALL BE THE SOLE RESPONSIBILITY OF THE APPLICANT AND THE PROFESSIONAL CIVIL ENGINEER TO CORRECT ANY ERROR, OMISSION, OR VARIATION FROM THE ABOVE REQUIREMENTS FOUND IN THESE PLANS.
3. THE CONTRACTOR SHALL BE RESPONSIBLE FOR PROVIDING ADEQUATE SAFEGUARDS, SAFETY DEVICES, PROTECTIVE EQUIPMENT, FLAGGERS, AND ANY OTHER NEEDED ACTIONS TO PROTECT THE LIFE, HEALTH, AND SAFETY OF THE PUBLIC, AND TO PROTECT PROPERTY IN CONNECTION WITH THE PERFORMANCE OF WORK COVERED BY THE CONTRACTOR. ANY WORK WITHIN THE TRAVELED RIGHT-OF-WAY THAT MAY INTERRUPT NORMAL TRAFFIC FLOW SHALL REQUIRE AT LEAST ONE FLAGGER FOR EACH LANE OF TRAFFIC AFFECTED. ALL SECTIONS OF THE WSDOT STANDARD SPECIFICATIONS 1-07.23 – TRAFFIC CONTROL, SHALL APPLY.
4. ANY TRENCH DEEPER THAN 5 FEET WILL REQUIRE SHORING FOR TRENCH WALL STABILIZATION.

TESC NOTES:

1. SILT FENCE TO BE INSTALLED AS STAND-ALONE UNLESS RUNNING ALONG EXIST. FENCE.
2. CONTRACTOR'S STAGING AREA AND STOCKPILE AREAS SHALL BE DETERMINED PRIOR TO START OF CONSTRUCTION.

RECOMMENDED CONSTRUCTION SEQUENCE:

(1) PRE-CONSTRUCTION MEETING.
(2) GRADE AND INSTALL CONSTRUCTION ENTRANCE(S).
(3) INSTALL PERIMETER PROTECTION (SILT FENCE, BRUSH BARRIER, ETC.).
(4) GRADE AND STABILIZE CONSTRUCTION ROADS.
(5) INSTALL WIDE FLANGE STEEL PILES.
(6) INSTALL ELECTRICAL UNDERGROUND AND MECHANICAL TRACKERS
(7) INSTALL PANELS
(8) PERFORM ANY REQUIRED SITE RESTORATION

TESC LEGEND:

- SILT FENCE – SEE DETAIL ON SHEET C2.1
- CONSTRUCTION ENTRANCE – SEE DETAIL ON SHEET C2.1

REVISIONS		
DESCRIPTION	BY	DATE

© THE PLANS SET FORTH ON THIS SHEET ARE AND SHALL REMAIN THE PROPERTY OF ENCOMPASS ENGINEERING & SURVEYING.

TUUSSO ENERGY, LLC
URTICA SITE
TESC, GRADING, AND DRAINAGE PLAN

Encompass ENGINEERING & SURVEYING
Western Washington Division
165 NE Juniper Street, Suite 201 • Issaquah, WA 98027 • Phone: (425) 392-0250 • Fax: (425) 391-3055
Eastern Washington Division
407 Southwater Blvd. • Ste Elum, WA 98922 • Phone: (509) 674-7433 • Fax: (509) 674-7419

JOB NO.	17018
DATE	Sept. 27 2017
SCALE	AS SHOWN
DESIGNED	SF
DRAWN	SF
CHECKED	TML
APPROVED	TML
SHEET	C2.0

TUUSSO ENERGY - URTICA SITE

A PORTION OF THE SW 1/4 SECTION 10, T. 17 N., R. 18 E., W.M.
KITTATAS COUNTY, STATE OF WASHINGTON

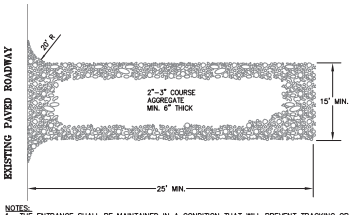

NOTES:
1. THE ENTRANCE SHALL BE MAINTAINED IN A CONDITION THAT WILL PREVENT TRACKING OR FLOWING OF SEDIMENT ONTO PUBLIC RIGHTS-OF-WAY. THIS MAY REQUIRE TOP DRESSING, REPAIR AND/OR CLEANOUT OF ANY MEASURES USED TO TRAP SEDIMENT.
2. WHEN NECESSARY, WHEELS SHALL BE CLEANED PRIOR TO ENTRANCE ONTO PUBLIC RIGHT-OF-WAY.
3. WHEN WASHING IS REQUIRED, IT SHALL BE DONE ON AN AREA STABILIZED WITH CRUSHED STONE THAT DRAINS INTO AN APPROVED SEDIMENT TRAP OR SEDIMENT BASIN.

ROCK CONSTRUCTION ENTRANCE

N.T.S.

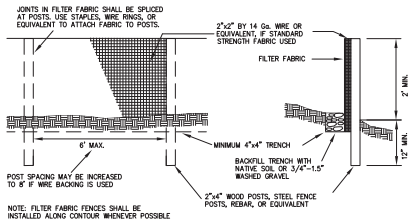

SILT FENCE DETAIL

N.T.S.

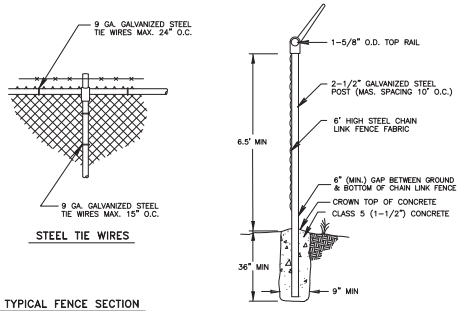

TYPICAL FENCE SECTION

POST AND RAIL SPECIFICATIONS			
POST	PIPE	ROLL FORMED	
	NOM. SIZE (SCH. 40) I.D.	SECTION	WEIGHT (lb/ft)
END, CORNER, OR PULL POST	2 1/2" DIAM.	Y	5.10
LINE OR BRACE POST	2" DIAM.	Z	1.85

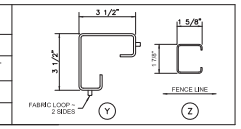

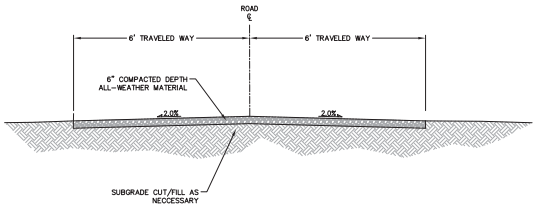

TYPICAL ALL-WEATHER ACCESS ROAD SECTION

N.T.S.

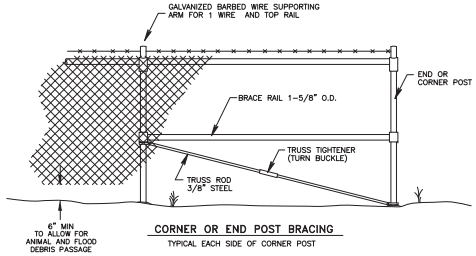

CORNER OR END POST BRACING

TYPICAL EACH SIDE OF CORNER POST

CHAIN LINK FENCE DETAIL

N.T.S.

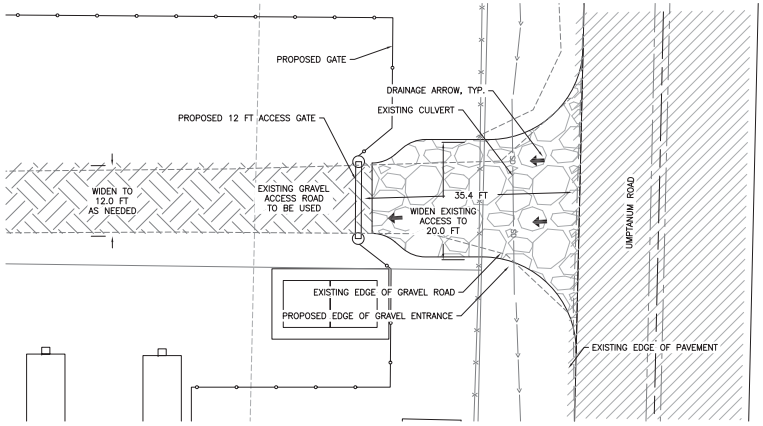

SITE ACCESS DETAIL

1"=10'

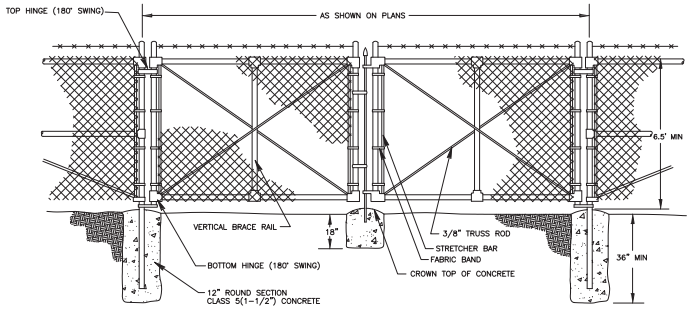

CHAIN LINK FENCE GATE DETAIL

N.T.S.

REVISIONS		
DESCRIPTION	BY	DATE

© THE PLANS SET FORTH ON THIS SHEET ARE AND SHALL REMAIN THE PROPERTY OF ENCOMPASS ENGINEERING & SURVEYING.

TUUSSO ENERGY, LLC
URTICA SITE
TESC DETAILS AND STANDARD DETAILS

Encompass ENGINEERING & SURVEYING
Western Washington Division
165 NE Juniper Street, Suite 201 • Issaquah, WA 98027 • Phone: (425) 392-0250 • Fax: (425) 391-3055
Eastern Washington Division
407 Southeast Blvd. • Cle Elum, WA 98922 • Phone: (509) 674-7433 • Fax: (509) 674-7419

JOB NO.	17018
DATE	Sept. 27 2017
SCALE	AS SHOWN
DESIGNED	SF
DRAWN	SF
CHECKED	TML
APPROVED	TML
SHEET	C2.1

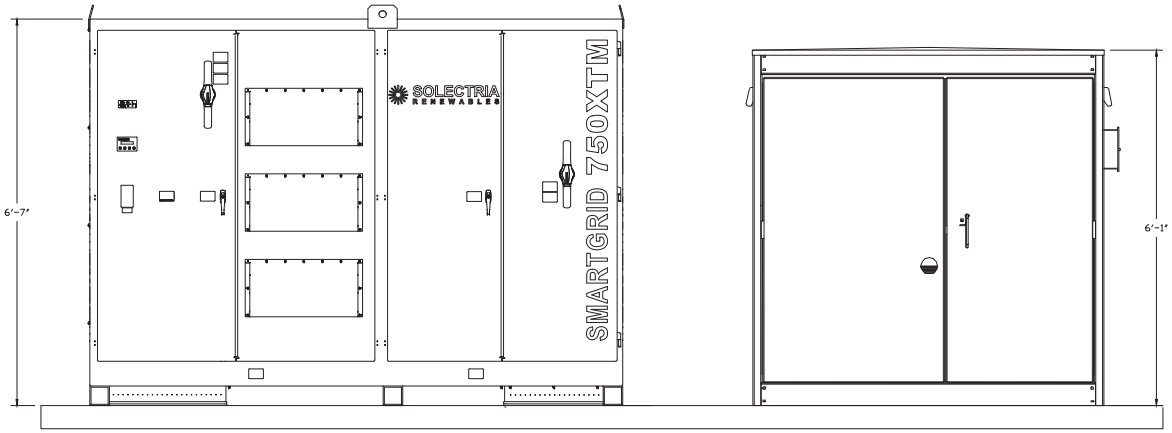

A 1500 kVA BLOCK ELEVATION
SCALE: 1"=1'

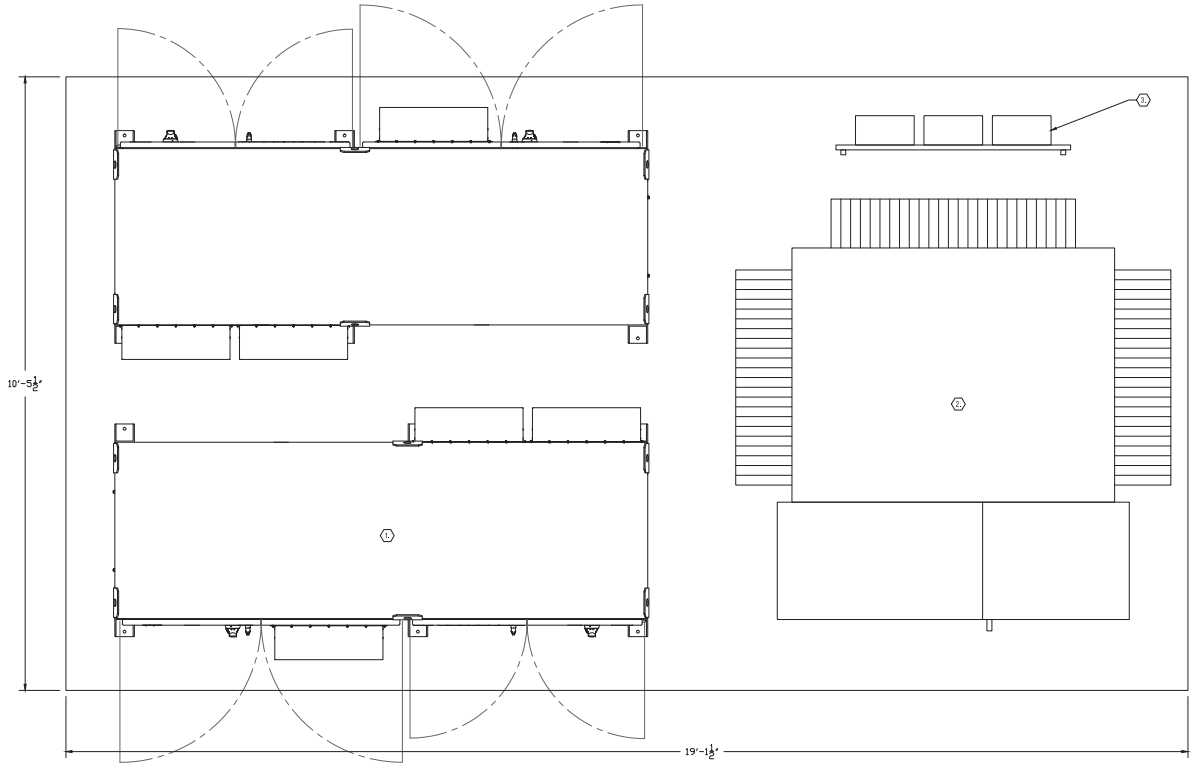

B 1500 kVA BLOCK LAYOUT
SCALE: 1"=1'

NOTES:

1. NONE.

KEYED NOTES:

1. SOLECTRIA SGI 750KVA INVERTER
2. 1500KVA 15KV TRANSFORMER
3. COMMUNICATION RACK

TUUSSO ENERGY

MaxPV ENGINEERING DEVELOPMENT
3131 POLYGON // SACRAMENTO, CA
WWW.MAXPVENGINEERING.COM

REV. NO.	DATE	DESCRIPTION	BY	CHK.	APR.
A	08-09-17	FOR PLAN REVIEW	LB	–	–

OWNER: TUUSSO ENERGY

PROJECT SITE: URTICA SOLAR PROJECT

DRAWING: EQUIPMENT PAD DETAILS

DRAWING NO. E-401

THE INFORMATION CONTAINED IN THESE DRAWINGS ARE CONFIDENTIAL AND ARE INTENDED FOR THE DESCRIBED PROJECT ONLY.

THIS PRINT IS NOT TO BE USED FOR CONSTRUCTION UNLESS NOTED AND SIGNED OK FOR CONSTRUCTION ABOVE LAST REVISION.

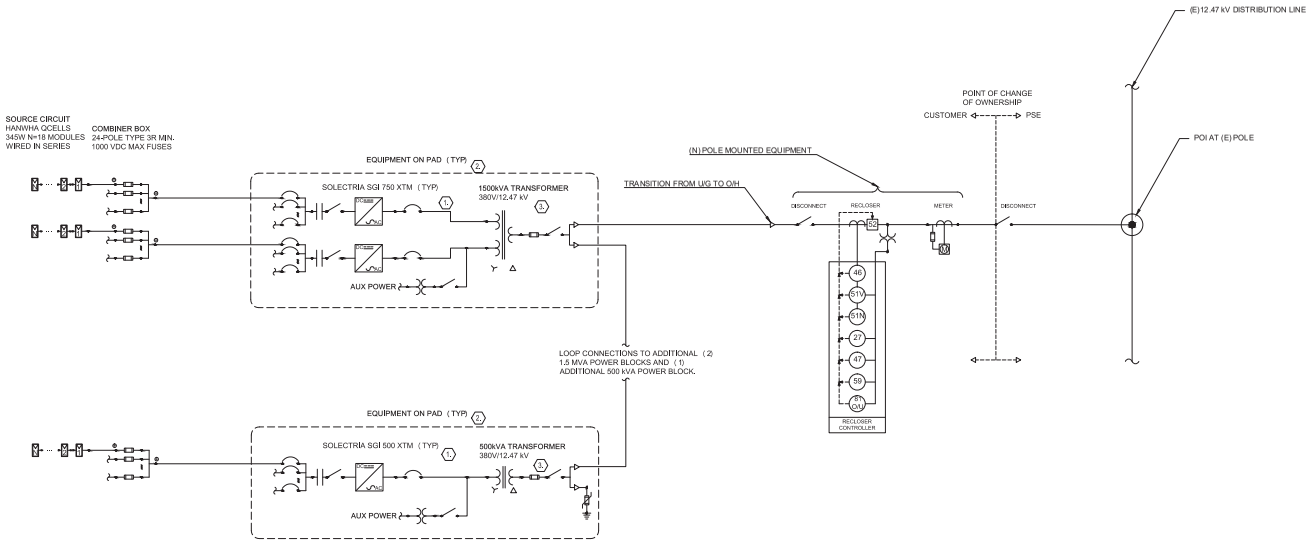

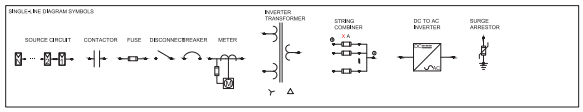

THE INFORMATION CONTAINED IN THESE DRAWINGS ARE CONFIDENTIAL AND ARE INTENDED FOR THE DESCRIBED PROJECT ONLY.

NOTES:

1. NONE.

KEYED NOTES:

1. **PV POWER CONDITIONING SYSTEM:** IEEE 929 AND IEEE 1547 COMPLIANT- 1000VDC MAX INPUT VOLTAGE. INVERTER EQUIPPED WITH INTEGRATED DC CIRCUIT BREAKER COMBINER.
2. EQUIPMENT PAD WITH INVERTER(S), STEP UP TRANSFORMER, AND COMMUNICATION EQUIPMENT.
3. TRANSFORMER SPECIFICATIONS TBD. VERIFY WITH INVERTER MFR & PSE FOR FINAL TRANFORMER CONFIGURATION.

TUUSSO ENERGY

MaxPV ENGINEERING DEVELOPMENT
3231 POLYGON // SACRAMENTO, CA
WWW.MAXPVENGINEERING.COM

REV. NO.	DATE	DESCRIPTION	BY	CHK.	APR.
A	08-09-17	FOR PLAN REVIEW	LB	–	–

OWNER: TUUSSO ENERGY

PROJECT SITE: URTICA SOLAR PROJECT

DRAWING: SINGLE LINE DIAGRAM

DRAWING NO. E-601

THIS PRINT IS NOT TO BE USED FOR CONSTRUCTION UNLESS NOTED AND SIGNED OK FOR CONSTRUCTION ABOVE LAST REVISION.

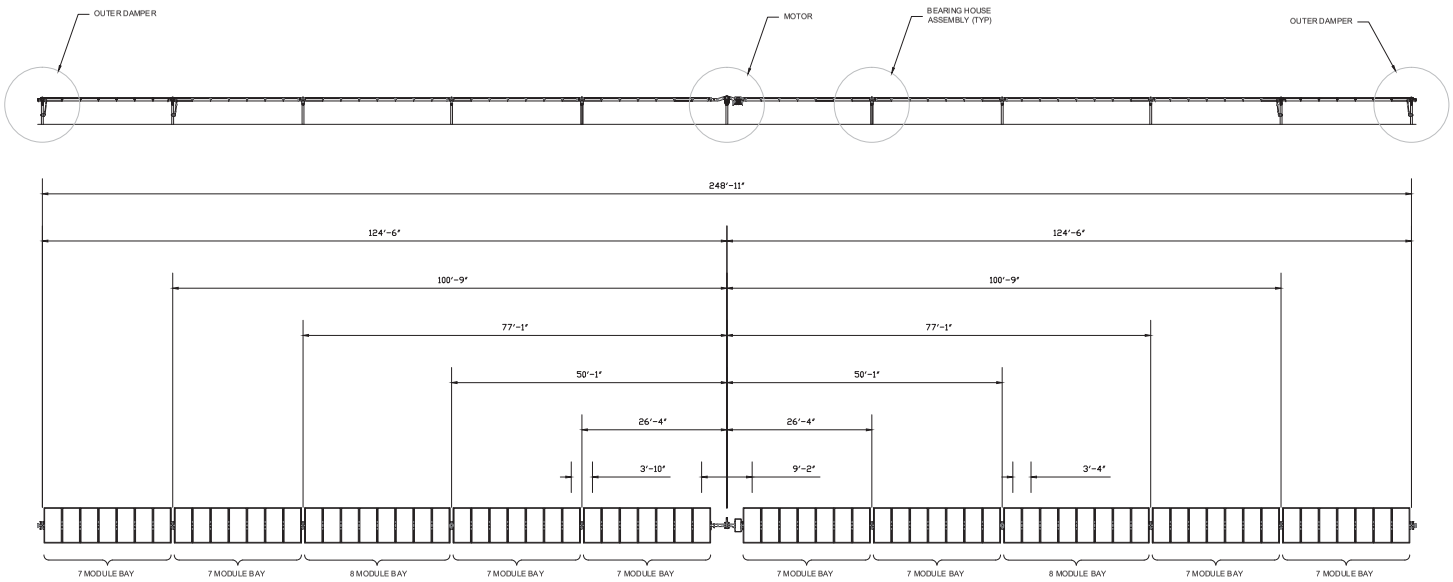

A 72 MODULE TRACKER

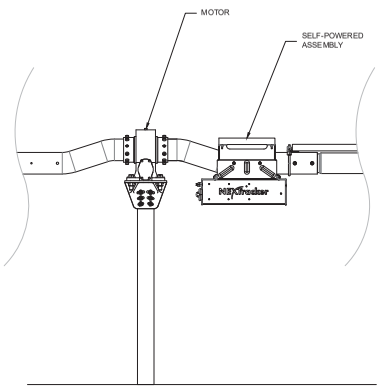

B MOTOR PILE DETAIL

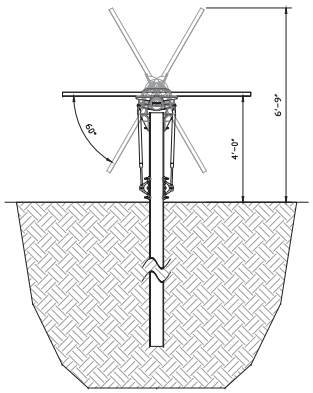

C TRACKER PROFILE

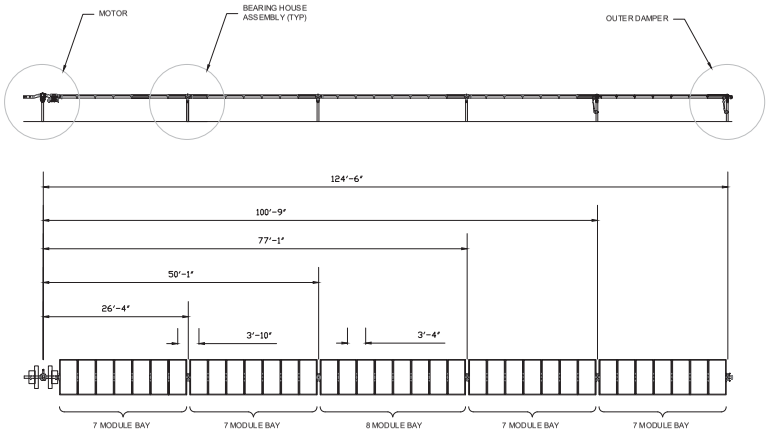

D 36 MODULE TRACKER

NOTES:

1. NONE.

KEYED NOTES:

1. NONE.

TUUSSO ENERGY

MaxPV ENGINEERING DEVELOPMENT
3131 POLYGON // SACRAMENTO, CA
WWW.MAXPVENGINEERING.COM

REV. NO.	DATE	DESCRIPTION	BY	CHK.	APR.
A	08-09-17	FOR PLAN REVIEW	LB	–	–

OWNER: TUUSSO ENERGY

PROJECT SITE: URTICA SOLAR PROJECT

DRAWING: TRACKER ELEVATIONS

DRAWING NO. E-701

THIS PRINT IS NOT TO BE USED FOR CONSTRUCTION UNLESS NOTED AND SIGNED OK FOR CONSTRUCTION ABOVE LAST REVISION.

THE INFORMATION CONTAINED IN THESE DRAWINGS ARE CONFIDENTIAL AND ARE INTENDED FOR THE DESCRIBED PROJECT ONLY.

The Q.ANTUM solar module Q.PLUS L-G4.2 with power classes up to 345 Wp is the strongest module of its type on the market globally. Powered by 72 Q CELLS solar cells Q.PLUS L-G4.2 was specially designed for large solar power plants to reduce BOS costs. Only Q CELLS offers German engineering quality with our unique triple Yield Security.

LOW ELECTRICITY GENERATION COSTS
Higher yield per surface area and lower BOS costs thanks to higher power classes and an efficiency rate of up to 17.6 %.

INNOVATIVE ALL-WEATHER TECHNOLOGY
Optimal yields, whatever the weather with excellent low-light and temperature behavior.

ENDURING HIGH PERFORMANCE
Long-term yield security with Anti-PID Technology[1], Hot-Spot-Protect and Traceable Quality Tra.Q™.

EXTREME WEATHER RATING
High-tech aluminum alloy frame, certified for high snow (5400 Pa) and wind loads (2400 Pa).

A RELIABLE INVESTMENT
Inclusive 12-year product warranty and 25-year linear performance guarantee[2].

THE IDEAL SOLUTION FOR:

Engineered in Germany

Q CELLS

Our most amazing tracker yet.

In our mission to make solar a mainstream energy source, NEXTracker has engineered the most intelligent and flexible tracking technology yet. Using sustainable design methods with outcomes that benefit people and the planet, we bring you: NX Horizon®.

NX Horizon (formerly referred to as the Self-Powered Tracker or SPT), brings self-contained motor power to each row, eliminating power wiring and trenching. Our advanced horizontal tracker has the widest rotational range available, lowest O&M costs, and requires far less power to operate than other trackers. By offering more powerful systems at a greater value, NEXTracker enables greater deployment of renewable energy worldwide.

NX Horizon key features and benefits include:

– Self-powered system with smart performance communications: Self-contained units on each row include a dedicated PV panel to provide power to the controller which drives the motor and hosts intelligent control electronics to position each tracker. With smart communications built in, NX Horizon systems can be accessed remotely, providing customers with a granular view to optimize tracker performance, operations and maintenance.

– Independent balanced rows with 120 degree rotational range: Each NX Horizon row has its own controlled motor with rotational range that delivers up to 2% more energy than typical linked row trackers. These agile, independent rows slow in less than 90 seconds to reduce wind forces on the array, protecting the PV modules in harsh environments. NX Horizon solar trackers also have a mechanically balanced row design that align PV panels with the tracker's axis of rotation – which greatly reduces row torque, using less energy from the motor to track throughout the day.

– Self-grounded system with theft-proof fasteners: NX Horizon is the world's first horizontal tracker with an entirely self-grounded design. This means no separate bonding hardware is required. You save on material and associated costs by eliminating grounding washers, braided straps, bare copper wire, and grounding rods. What's more, we've designed our own fasteners that can only be removed with special tools – deterring PV theft.

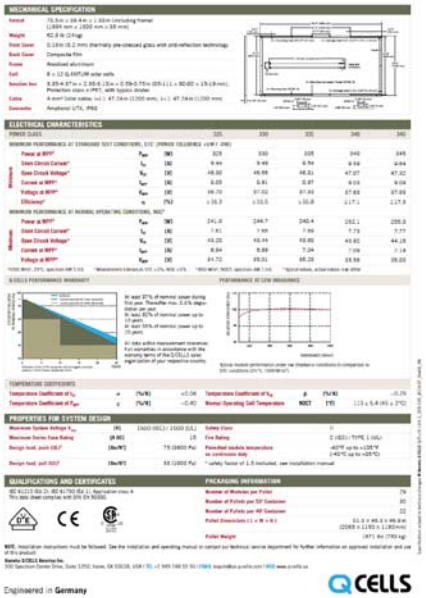

NX Horizon Specifications

Tracking Technology	Horizontal single-axis balanced mass tracker with independently driven rows
Tracking Range	Up to 120° (± 60°)
Control System	1 Self-Powered Controller (SPC) per tracker; 1 Network Control Unit (NCU) per 100 SPCs
Communications	Wireless ZigBee® mesh network/SCADA; no communication wiring required
Drive System	One slew gear, 24 VDC motor and self-powered controller w/dedicated solar panel per row
DC Capacity	23.35kWp per tracker row, depending on panel type. Row length up to 90 panels.
System Voltage	1500 volt or 1500 volt
Power Consumption	No grid power required
Ground Coverage Ratio	Fully configurable by customer; typical range 33%-50%
Installation Method	Rapid field assembly, no welding required
Foundation Types	Compatible with all major foundation types (driven pier, concrete foundation, ground screw)
Standard Wind Design	100 mph/161 kph, 3 second gust per ASCE7-10; configurable for higher wind speeds
Safety Stowing	Automated wind and snow stowing with self-contained backup power; no external power required
Torsional Limiter	Included at each foundation/bearing for additional wind and snow load protection
Principal Materials	Galvanized and stainless steel
Grounding Method	Self-grounding structure; separate materials and labor not required
Compliance	Grounding/bonding: UL2703; structural design: ASCE7-10
Other Available Options	Snow and flood sensors
Warranty	10-years on structural components; 5-years on drive and control systems
Typical Dimensions	Height 2.1 m/6.8 ft @ 60°, Width 2.0 m/6.4 ft, Length 85 m/283 ft

Typical 72-cell c-Si configuration: 85 m row with 80 panels mounted in portrait:

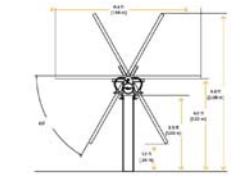

NEXTracker
6200 Paseo Padre Parkway
Fremont, CA 94555 USA
+1 510 270 2500
nextracker.com

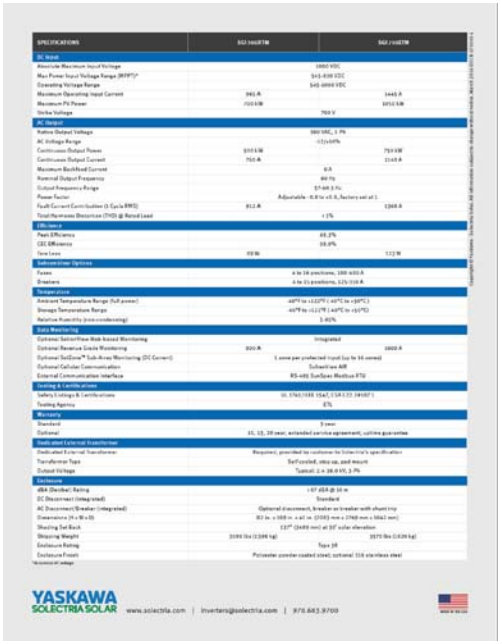

TUUSSO ENERGY

MaxPV ENGINEERING DEVELOPMENT
555 POLVOSO // SACRAMENTO, CA
WWW.MAXPVENGINEERING.COM

REV. NO.	DATE	DESCRIPTION	BY	CHK.	APR.
A	08-09-17	FOR PLAN REVIEW	LB	–	–

OWNER: TUUSSO ENERGY

PROJECT SITE: URTICA SOLAR PROJECT

DRAWING: MAJOR EQUIPMENT SPECIFICATIONS

DRAWING NO. E-901

THE INFORMATION CONTAINED IN THESE DRAWINGS ARE CONFIDENTIAL AND ARE INTENDED FOR THE DESCRIBED PROJECT ONLY.

THIS PRINT IS NOT TO BE USED FOR CONSTRUCTION UNLESS NOTED AND SIGNED OK FOR CONSTRUCTION ABOVE LAST REVISION.